08/2018

Mod: SC-123T/S

Production code: Polar 52

Diamond
catering equipment

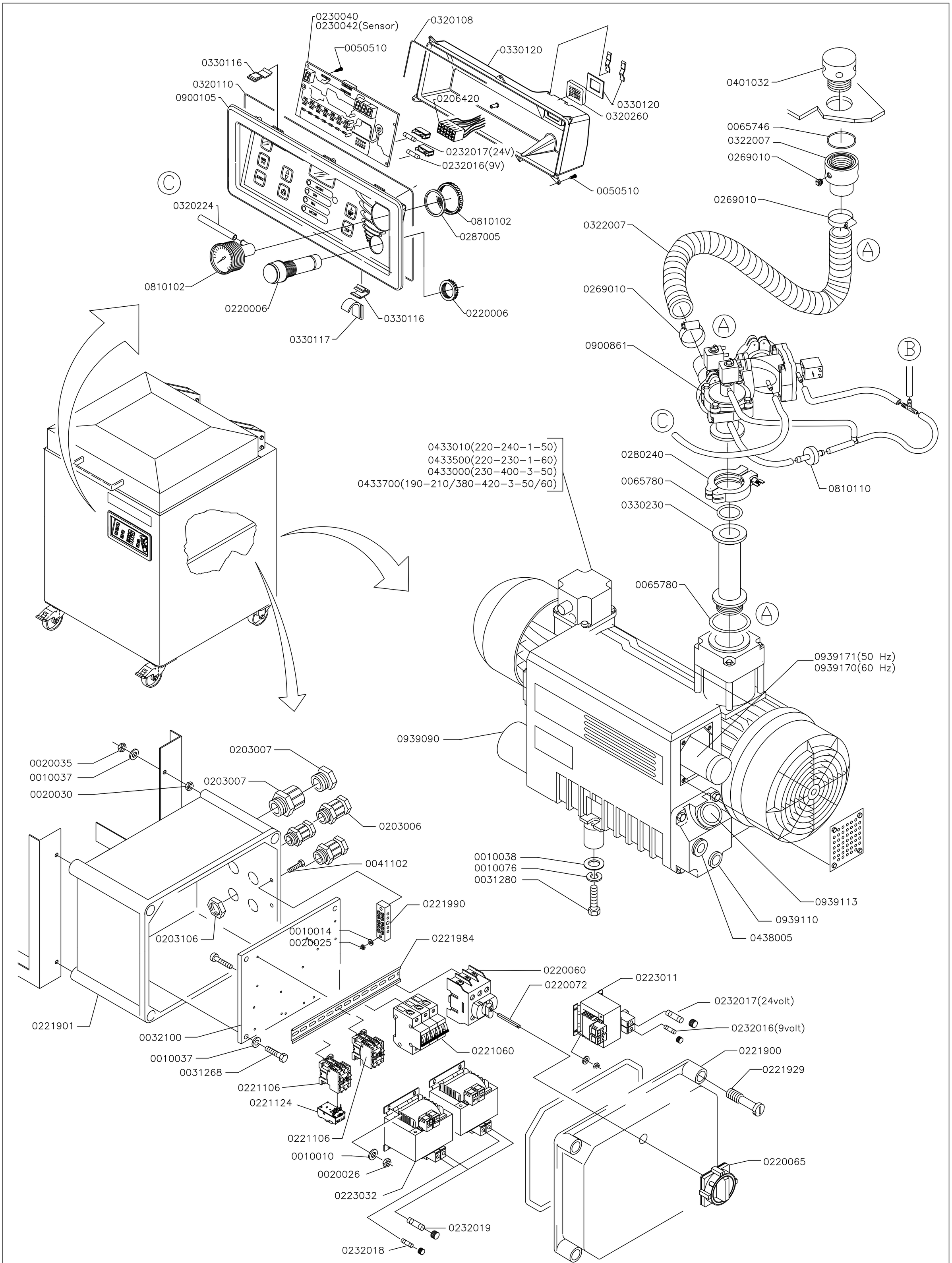

Scale:	Name:	Exploded View POLAR 52
Date: NOV 2017		
Drawn by: MD		
Diamond catering equipment	A 4	Drawing: Page 1–2
		Rev, no: 051

Ownership explicitly reserved. Multiplication or information to third – parties in any form is not permitted without written permission of the owner.

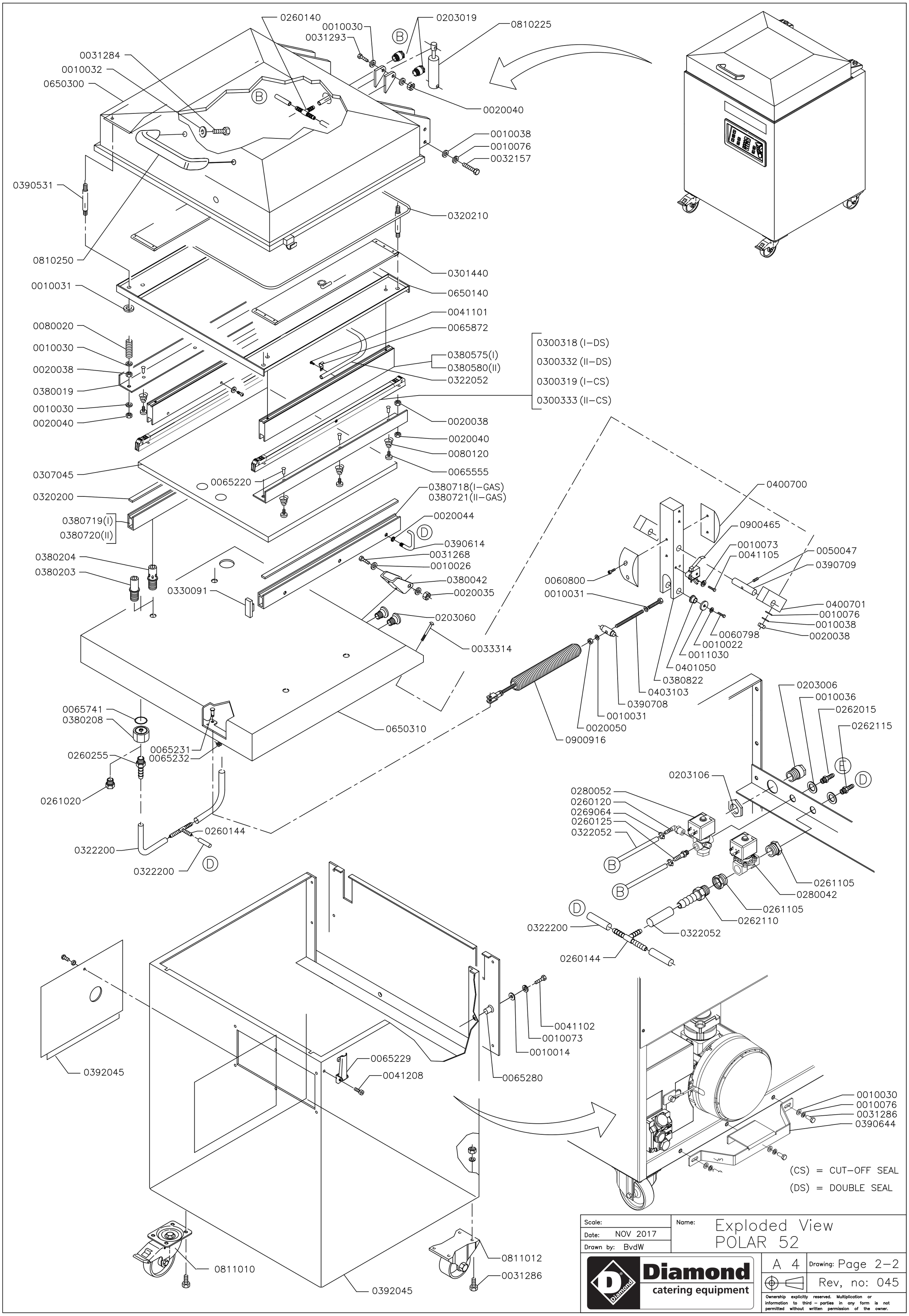

Scale:	
Date: NOV 2017	Name: Exploded View POLAR 52
Drawn by: BvdW	
Diamond catering equipment	A 4 — Drawing: Page 2–2
	Rev, no: 045

Ownership explicitly reserved. Multiplication or information to third – parties in any form is not permitted without written permission of the owner.