09/2021

Mod: SFTEV40/58-N

Production code: OSV2A13

Diamond

A.

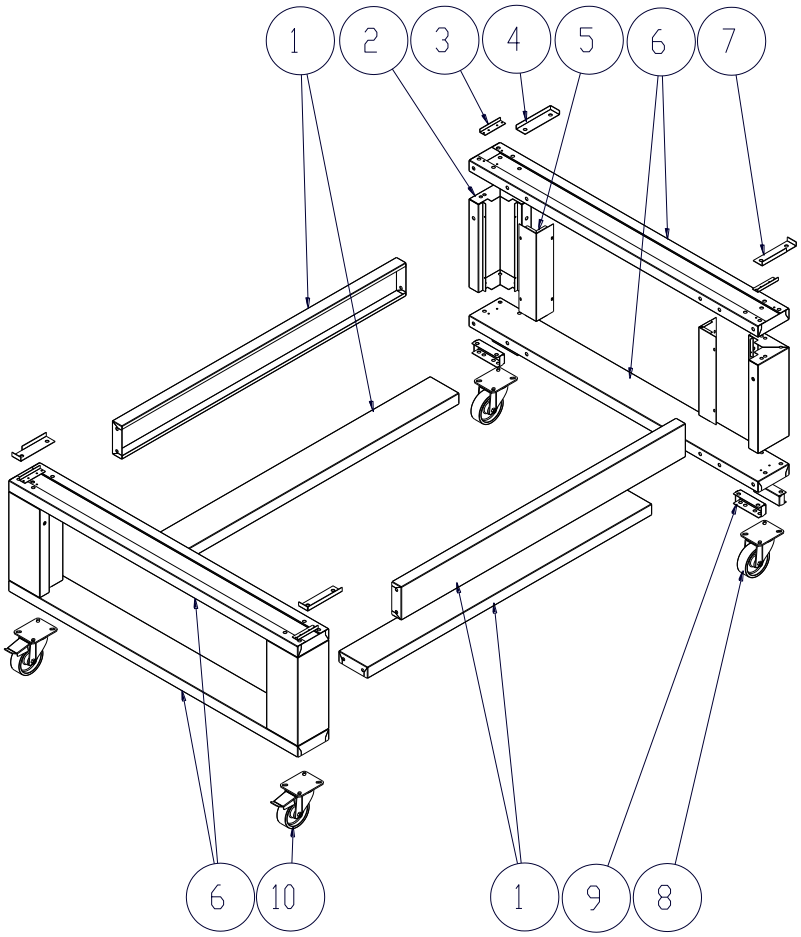

B.

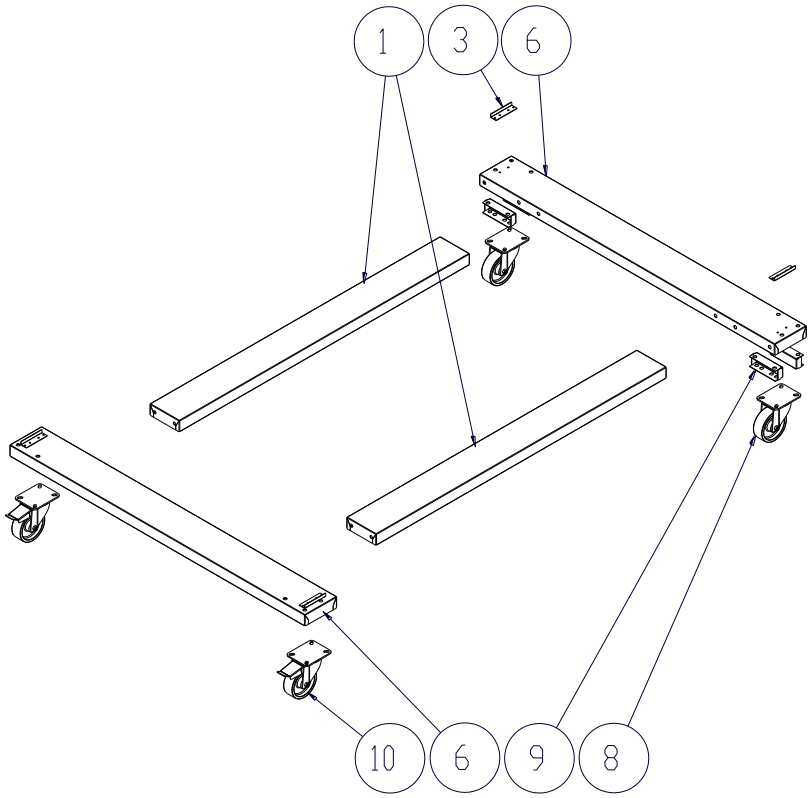

			06/40 EL BM	06/40 GAS BM	08/50 BM	11/65 EL BM	11/65 GAS BM	12/80 BM	12/100 EL BM	12/100 GAS BM
①	**Traverse** Crosspieces *Travesaños*	LAT	TRAV0221	TRAV0222	TRAV0166	TRAV0171	TRAV0172	TRAV0216	TRAV0157	TRAV0158
⑥	***Traverses*** TRAVERSE	FRONT	TRAV0220	TRAV0220	TRAV0167	TRAV0173	TRAV0173	TRAV0215	TRAV0156	TRAV0156
② + ⑤	**Gambe+carter** Legs+cover *Pies+carter* ***Jambes+plaque*** **Stützbein+deckel**	1-2 MC	TRAV0223 CART0266	TRAV0223 CART0266	TRAV0195 CART0218	TRAV0174 CART0210	TRAV0174 CART0210	TRAV0217 CART0252	TRAV0159 CART0179	TRAV0159 CART0179
		2 MC	---	---	---	---	---	---	TRAV0208 CART0236	TRAV0208 CART0236
		3 MC	TRAV0224 CART0267	TRAV0224 CART0267	---	---	---	---	---	---
③	**Staffa fissaggio** Fixing spar	---	CARP1522	CARP1522	CARP1522	CARP1522	CARP1522	CARP1522	---	---
④	*Abrazadera sujección*	---	---	---	---	---	---	---	CARP1218	CARP1218
⑦	***Etrier de fixation*** BEFESTIGUNGSHALTER	---	---	---	---	---	---	---	CARP1219	CARP1219
⑧	**Ruota posteriore senza freno** Back wheel without brake *Rueda posterior sin freno* ***Roue posterieure sans frein*** HINTERRAD OHNE BREMSE	---	RUOT0027	RUOT0027	RUOT0027	RUOT0027	RUOT0027	RUOT0027	RUOT0026	RUOT0026
⑨	**Rinforzo traversa** Crosspiece reinforcement *Refuerzo para traviesa* ***Renforcement traverse*** VERSTÄRKUNG FÜR TRAVERSE	---	CARP1608	CARP1608	CARP1608	CARP1608	CARP1608	CARP1608	CARP1120	CARP1120
⑩	**Ruota anteriore con freno** Front wheel with brake *Rueda anterior con freno* ***Roue anterieure avec frein*** VORDERRAD MIT BREMSE	---	RUOT0026	RUOT0026	RUOT0026	RUOT0026	RUOT0026	RUOT0026	RUOT0001	RUOT0001