08/2018

Mod: WGL2-13

Production code: NGER13-70

Diamond
catering equipment

INSTALLATION, OPERATION and MAINTENANCE, INSTRUCTIONS

GAS ECONOMIC RANGE

MODELS: NGER_60 SERIES
NGER_70 SERIES
NGER_130 SERIES

Note: The picture is illustration only. We reserved the right to make technical changes in the interest in progress without prior notice.

Dear customer,

Thank you for choosing our product as your trusted partner. We ensure you that we always give our best as we produce this appliance by using the finest materials. Gas Economic Range is excellent choice to cook. In order to obtain maximum benefits of this appliance, please read this manual instruction carefully. Please notice the warnings and safety instructions to keep your safety. DO NOT use this appliance except its utility.

If you have any question or difficulty in operating this appliance, please contact your dealer to acquire mechanic assistance.

TABLE OF CONTENT

	Page
Cover …….....	1
Preface …….....	2
Table of Content …….....	3
General Information ……..	4
Safety Instructions …….....	5
Technical Data …….....	7
• Data Tables ……..	7
• Overall Dimension ……	11
Technical Data Plates ……	20
Component List …….....	24
• Water System Components ……	30
Installation (for the Installer) …….....	32
• Position and Fixing ……	33
• Gas Supply Connection ……	34
• Checking Gas Pressure and Nominal Heat Input ……	35
• Primary Air Adjuster …….....	36
• Install Pipe Leg ……	37
Use Instructions (for User) ……	38
• Warning …….....	38
• Turn ON / OFF …….....	39
Routine Cleaning and Maintenance ……	40
Trouble Shooting …….....	42
Warranty ……	43

GENERAL INFORMATION

Please read this manual instruction carefully before operating this appliance.

Gas Economic Range is an excellent cooking appliance. This appliance is using gas. Gas Economic Range designed for cooking both Western and Oriental cuisine like sautéing, shallow frying, frying, until boiling It is very important to keep this instruction book together with the appliance for future consultation. If this appliance sold or transferred elsewhere, make sure this book goes with it. Therefore, the new user can read about its functions and other relevant information.

If you have any question about the appliance, please contact your nearest dealer.

SAFETY INSTRUCTIONS

Very important!: Before installing, place the appliance on solid, flat, stable and horizontal surface and connection availability.

Read this manual instruction carefully before using Gas Economic Range. This appliance is for food preparation only. Below are safety instructions that strictly conformed:

- Improper installation, maintenance, cleaning, or modification to the appliance could lead to severe injury or death and could damage the appliance.
- The mechanics must instruct staff regularly to avoid accident and damage of the appliance.
- Gas Economic Range may be used for skilled staff only.
- DO NOT place the appliance in a toxic area or have a risk of explosion.
- DO NOT place the appliance near flammable materials such gasoline, fat, clothes, liquid gas, paper, etc.
- DO NOT place the appliance in wet or humid room or condition such in rain or near water leaks, etc.
- DO NOT use the appliance for drying clothes, paper, or living animals.
- DO NOT use the appliance to heat non-food products.
- Put the appliance in a good ventilated room.
- Before cleaning or maintaining the appliance, detach the gas line and allow it to cool.
- DO NOT touch the area .This sign means VERY HOT. Beware of severe burning injury.
- DO NOT attempt to dismantle or repair the appliance. The authorized mechanics must do all jobs.

EXPLOSION RISK !

- DO NOT cover the burners or drawers below or the air holes on the sidewalls with Aluminum or silver foil or similar materials. This may cause a wrong air circulation and gas combustion and lead to overheat.

INJURY RISK !

- DO NOT lean to Main Burner during ignition process. High flames from the range may cause severe burning injury.

INJURY RISK !

- DO NOT USE POT WITH FLAT BOTTOM on the Wok Burner Ring. During Full Combustion with or without Wok pot on it, the flame extends to the side or over the Wok Ring. This may cause severe burning injury.

TECHNICAL DATA

Gas Economic Range is made of stainless steel. This appliance used for cooking both Oriental and Western cuisine. With Dual function, the cooking ring can accommodate pan and wok. This appliance equipped with Safety device Thermocouple for user's safety.

- Data Tables

  Table 1: Technical Specification for NGER 4-60 and NGER 9-60

Technical Specification						
Model	NGER 4-60			NGER 9-60		
Overall Dimension (mm)	Width	Depth	Height	Width	Depth	Height
	475	600	850 / 950	900	600	850 / 950
Gas Connection	R ¾"			R ¾"		
Number of Burners	1			3		
Nominal Heat Input	G20 : 13 kW G30 : 11.5 kW			G20 : 26 kW G30 : 23 kW		
Gas Pressure Connection	G30 / G31 : 28 - 30 / 37 mbar G30 G31 : 50 mbar G20 : 20 mbar G25 : 20 - 25 mbar			G30 / G31 : 28 – 30 / 37 mbar G30 G31 : 50 mbar G20 : 20 mbar G25 : 25 mbar		
Ignition	Manual			Manual		

Table 2: Technical Specification for NGER 15-60 and NGER 20-60

Technical Specification						
Model	NGER 15-60			NGER 20-60		
Overall Dimension (mm)	Width	Depth	Height	Width	Depth	Height
	1500	600	850 / 950	2000	600	850 / 950
Gas Connection	R ¾”			R ¾”		
Number of Burners	3			4		
Nominal Heat Input	G20 : 39 kW G30 : 34.5 kW			G20 : 52 kW G30 : 46 kW		
Gas Pressure Connection	G30 / G31 : 28 – 30 / 37 mbar G30 G31 : 50 mbar G20 : 20 mbar G25 : 25 mbar			G30 / G31 : 28 – 30 / 37 mbar G30 G31 : 50 mbar G20 : 20 mbar G25 : 25 mbar		
Ignition	Manual			Manual		

Table 3: Technical Specification for NGER 7-70, NGER 13-70 and NGER 20-70

Model	NGER 7-70			NGER 13-70			NGER 20-70		
Overall Dimension (mm)	Width	Depth	Height	Width	Depth	Height	Width	Depth	Height
	700	700	850 / 1150	1300	700	850 / 1150	2000	700	850 / 1150
Pipe Diameter	Drain (D)	Gas Inlet (G)	Water Inlet (S)	Drain (D)	Gas Inlet (G)	Water Inlet (S)	Drain (D)	Gas Inlet (G)	Water Inlet (S)
	R 1 ¼"	R ¾"	R ½"	R 1 ¼"	R ¾"	R ½"	R 1 ¼"	R ¾"	R ½"
Number of Burners	1			2			3		
Nominal Heat Input	G20 : 13 kW G30 : 11.5 kW			G20 : 26 kW G30 : 23 kW			G20 : 39 kW G30 : 34.5 kW		
Gas Pressure Connection	G30 / G31 : 28 - 30 / 37 mbar G30 G31 : 50 mbar G20 : 20 mbar G25 : 20 - 25 mbar			G30 / G31 : 28 - 30 / 37 mbar G30 G31 : 50 mbar G20 : 20 mbar G25 : 20 - 25 mbar			G30 / G31 : 28 – 30 / 37 mbar G30 G31 : 50 mbar G20 : 20 mbar G25 : 25 mbar		
Ignition	Manual			Manual			Manual		

Table 4: Technical Specification for NGER 13-130 and NGER 20-130

Model	NGER 13-130			NGER 20-130		
Overall Dimension (mm)	Width	Depth	Height	Width	Depth	Height
	1300	1300	850	2000	1300	850
Pipe Diameter	Drain (D)	Gas Inlet (G)	Water Inlet (S)	Drain (D)	Gas Inlet (G)	Water Inlet (S)
	R 1 ¼”	R ¾”	R ½”	R 1 ¼”	R ¾”	R ½”
Number of Burners	4			6		
Nominal Heat Input	G20 : 52 kW G30 : 46 kW			G20 : 78 kW G30 : 69 kW		
Gas Pressure Connection	G30 / G31 : 28 - 30 / 37 mbar G30 G31 : 50 mbar G20 : 20 mbar G25 : 20 - 25 mbar			G30 / G31 : 28 - 30 / 37 mbar G30 G31 : 50 mbar G20 : 20 mbar G25 : 20 - 25 mbar		
Ignition	Manual			Manual		

- Overall Dimension

NGER 4-60

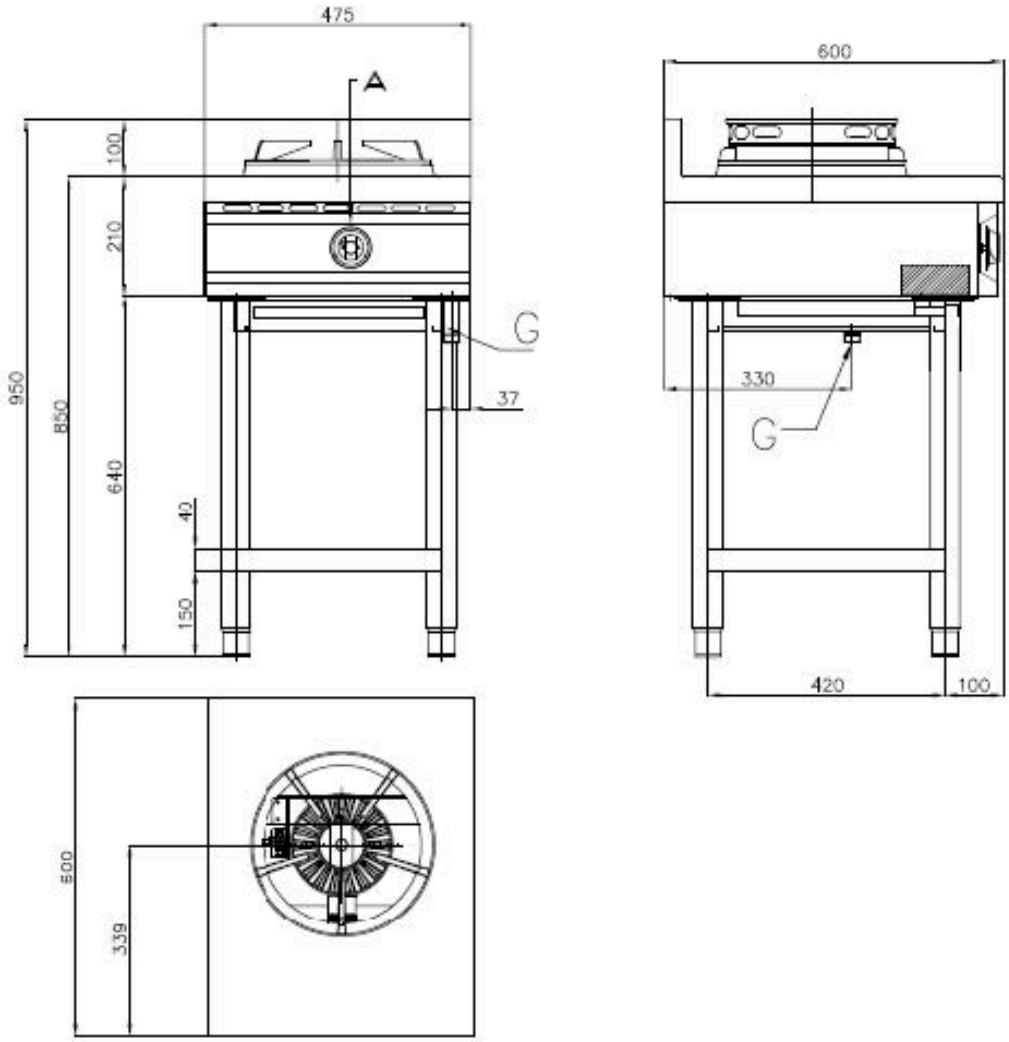

A = GAS VALVE BURNER

NGER 9-60

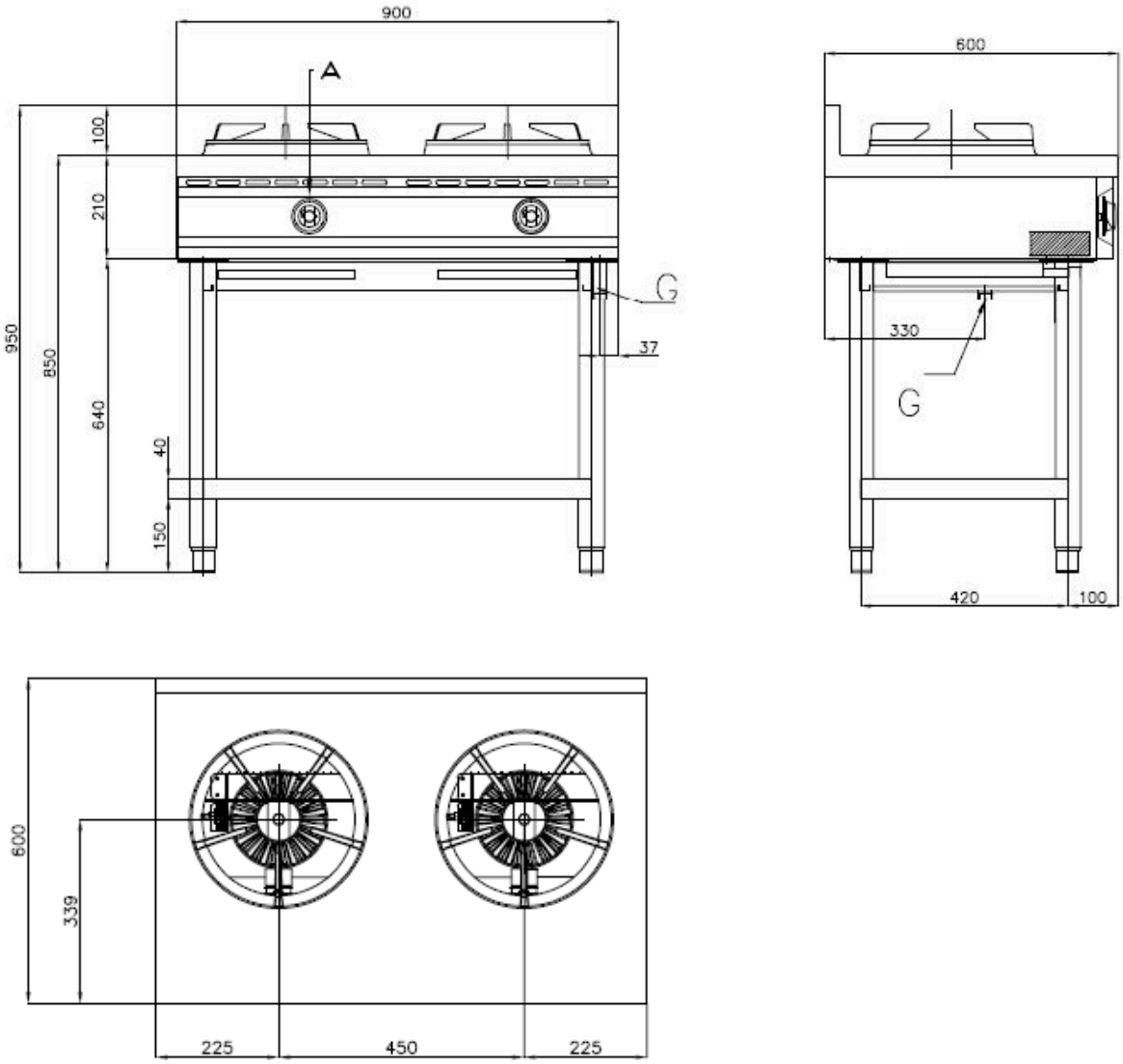

A = GAS VALVE BURNER

NGER 15-60

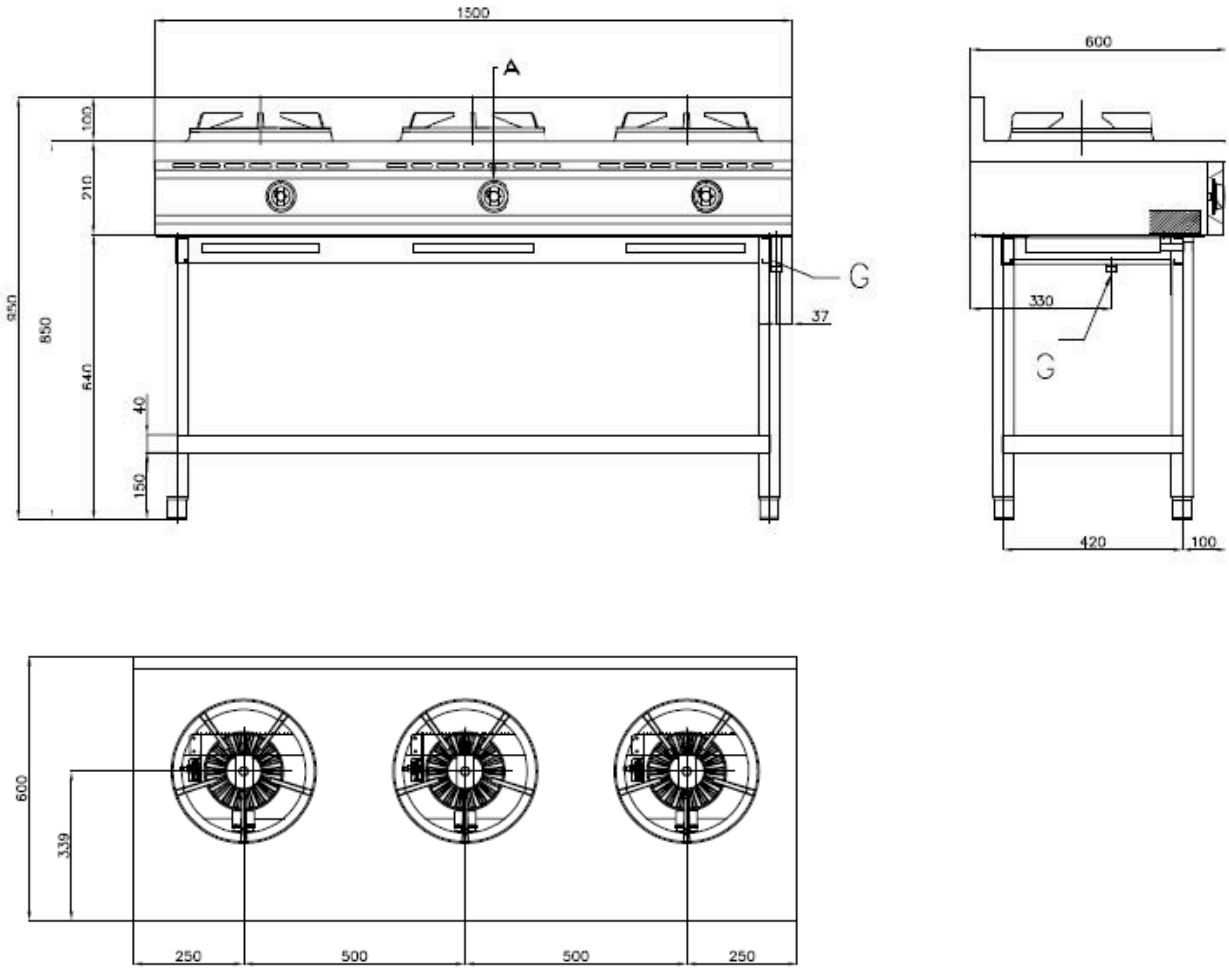

A = GAS VALVE BURNER

NGER 20-60

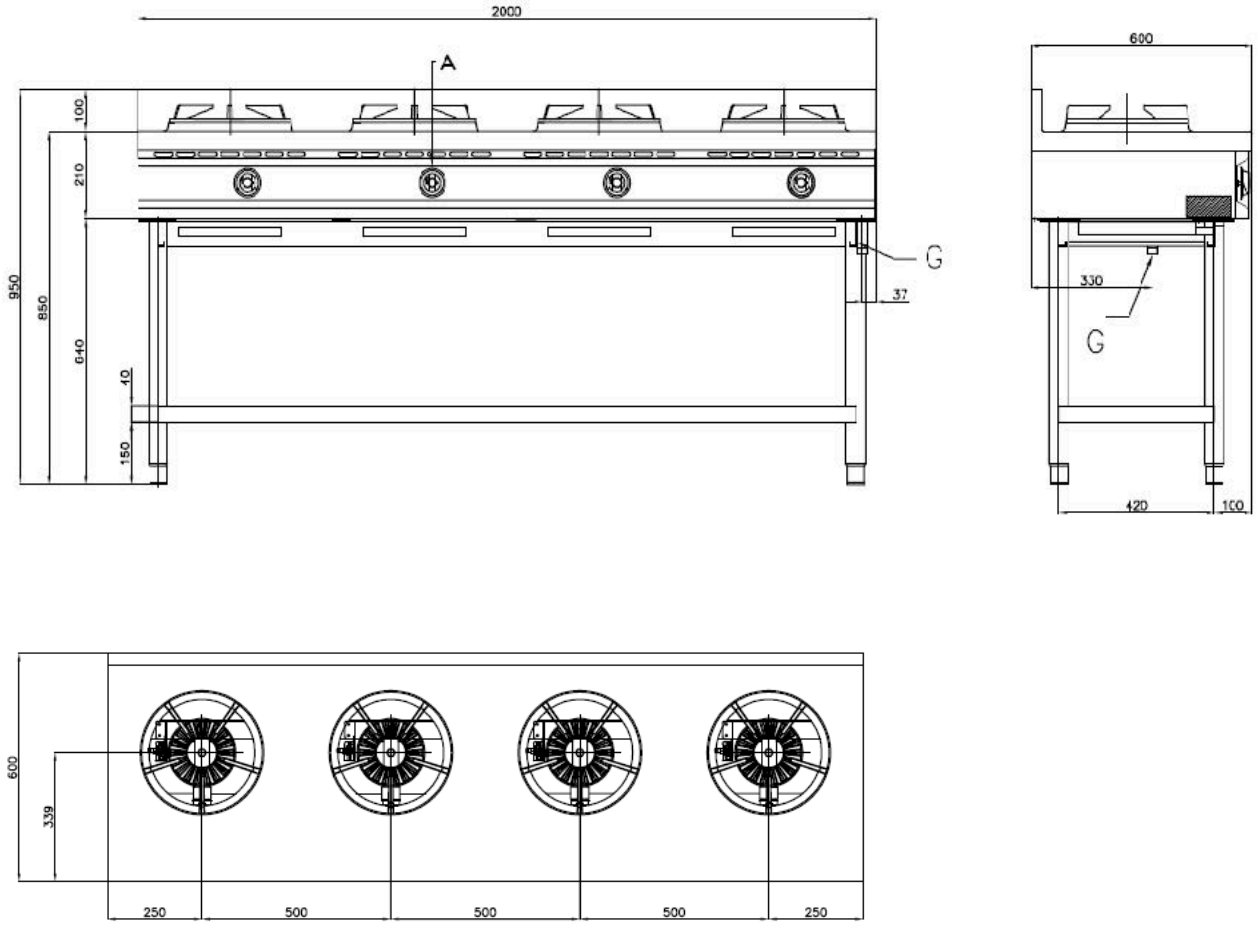

A = GAS VALVE BURNER

NGER 7-70

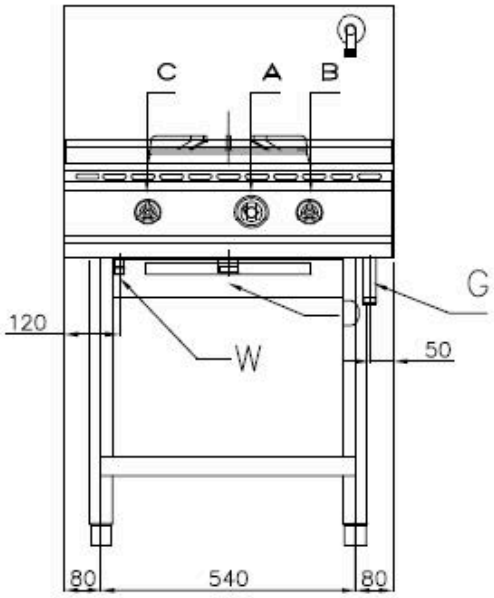

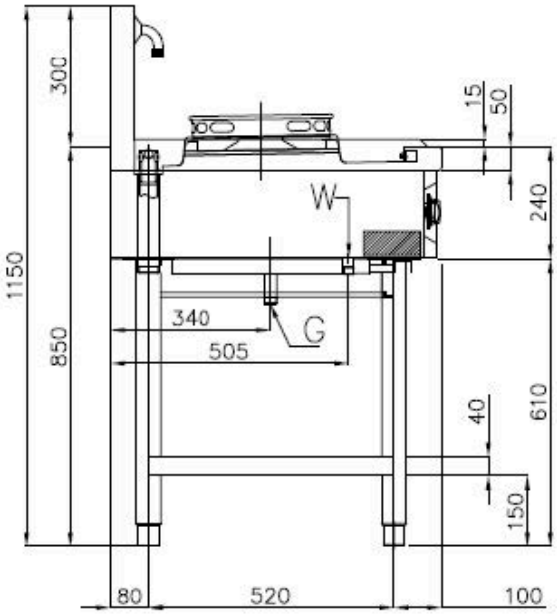

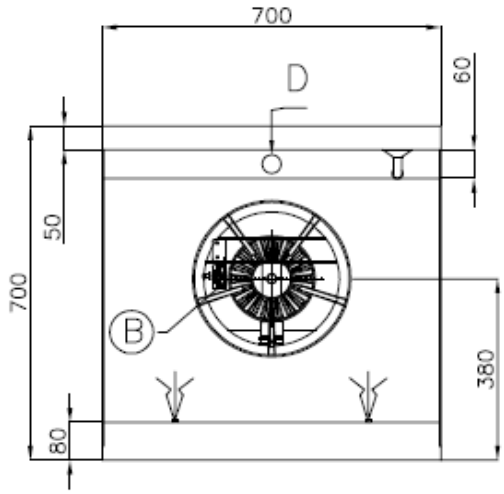

A = GAS VALVE BURNER
B = WATER TAP FAUCCET
C = WATER TAP SPRYER

NGER 13-70

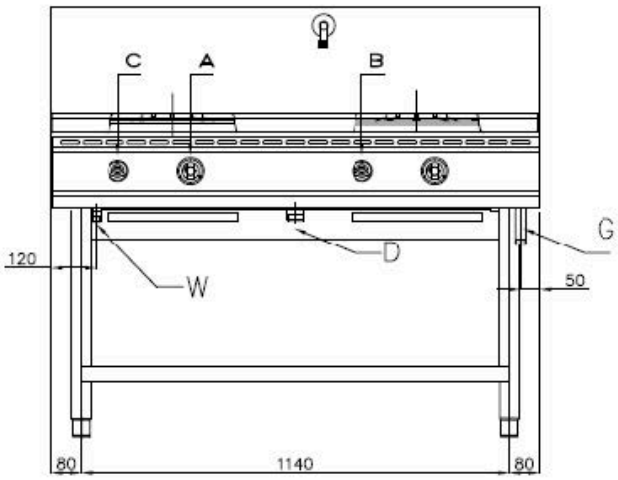

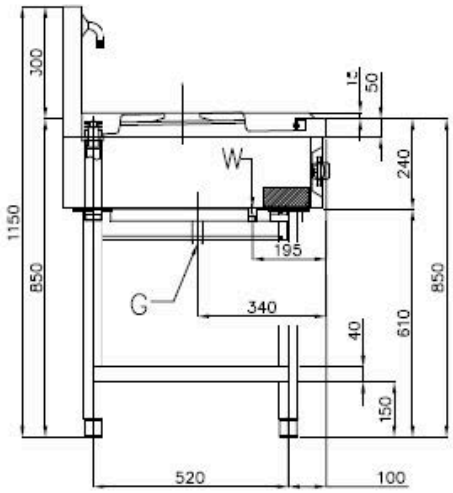

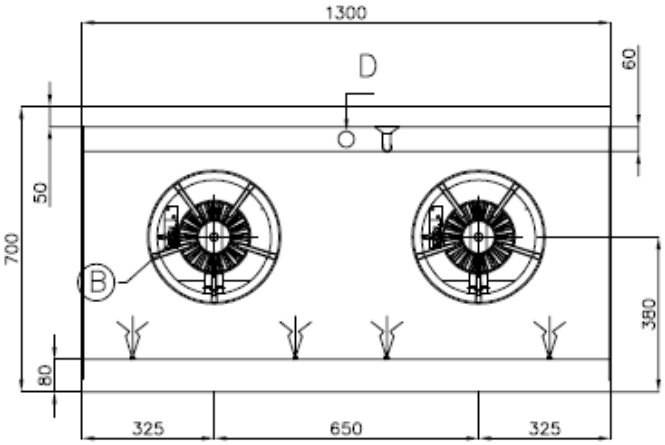

A = GAS VALVE BURNER
B = WATER TAP FAUCCET
C = WATER TAP SPRYER

NGER 20-70

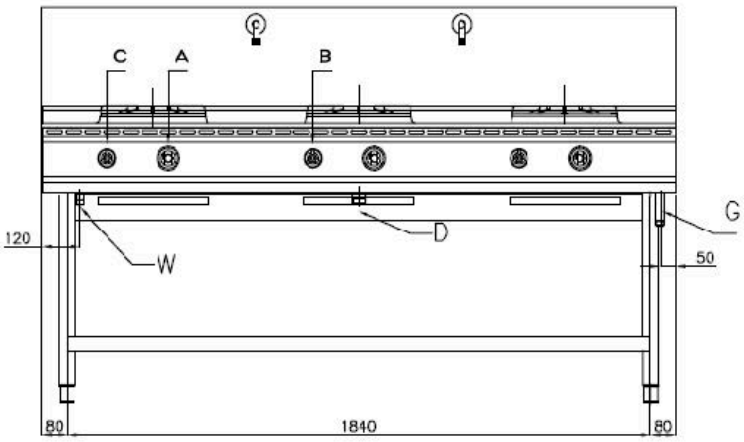

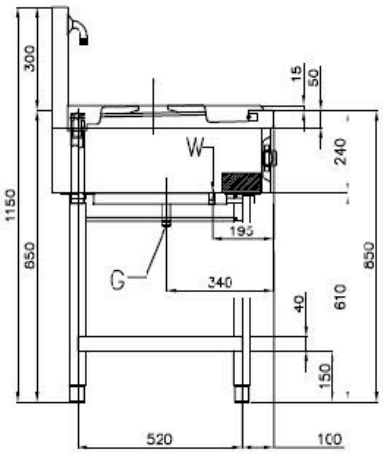

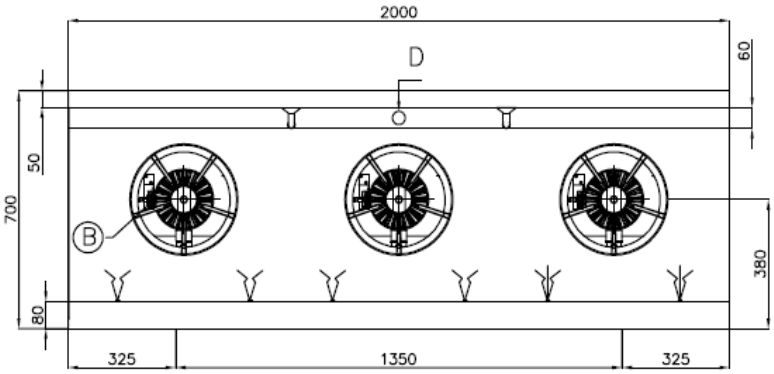

A = GAS VALVE BURNER
B = WATER TAP FAUCCET
C = WATER TAP SPRYER

NGER 13-130

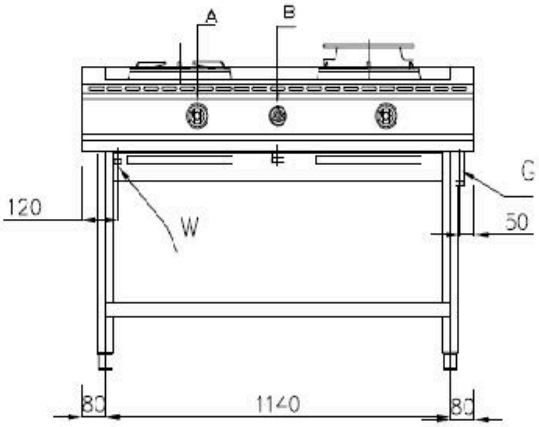

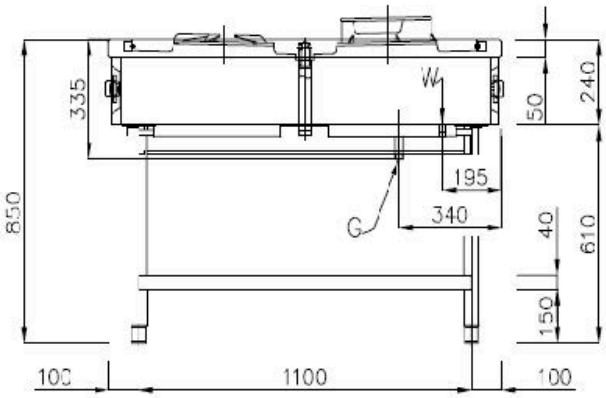

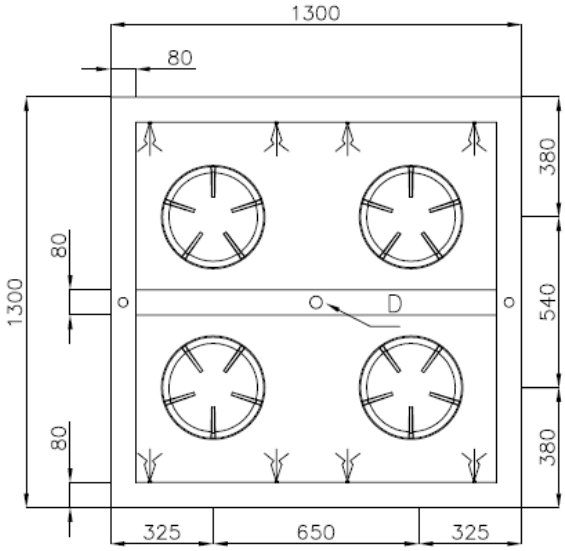

A = GAS VALVE BURNER
C = WATER TAP SPRYER

NGER 20-130

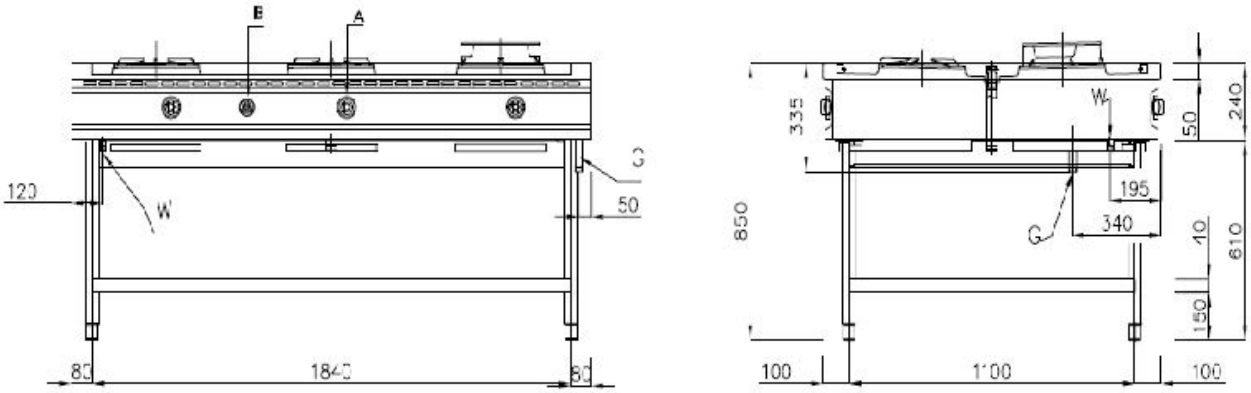

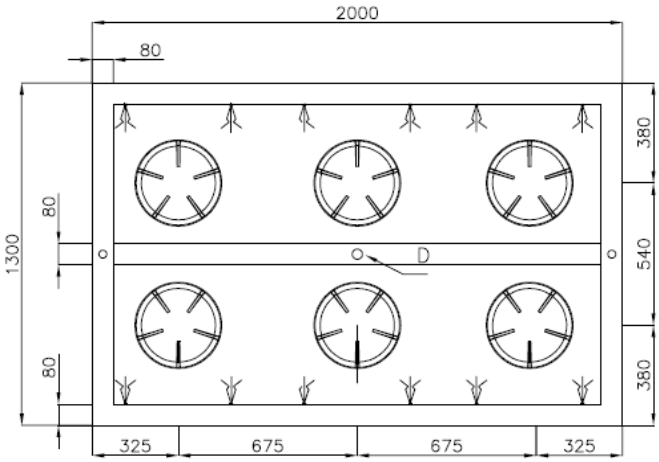

A = GAS VALVE BURNER
C = WATER TAP SPRYER

TECHNICAL DATA PLATES

Figure 1:

Technical plate reports the current gas setting, nominal data of Gas Economic Range and table with gases, categories, and pressures for other CE countries.

Fig. 1

REGULATED FOR:

Model : NGER 4 - 60
TYPE : A1
S/N : XXXXX
Σ Qn : 11.5 kW (LPG)
13 kW (Natural Gas)

Nayati

PT NAYATI INDONESIA
Jl. Raya Terboyo 19
Semarang 50112
Indonesia

CE 0051- 12

G20: 1.37 m³/h | G25: 1.60 m³/h | G30: 0.91 kg/h | G31: 0.89 kg/h

		G20	G25	G30	G31	
LU-PL	I2E	20	/	/	/	mbar
IS-MT-HU	I3B/P	/	/	30	30	mbar
IT-PT-ES-IE-CH-GB GR-CY-CZ-SK-SI-TR	II2H3+	20	/	28-30	37	mbar
FI-TR-SK-LV-LT-EE-DK-SE SI-NO-RO-GR-CY-BG-HR	II2H3B/P	20	/	30	30	mbar
AT-CH-SK	II2H3B/P	20	/	50	50	mbar
NL	II2L3B/P	/	25	30	30	mbar
FR-BE	II2E+3+	20	25	28-30	37	mbar
RO	II2E3B/P	20	/	30	30	mbar

REGULATED FOR:

Model : NGER 9 - 60
TYPE : A1
S/N : XXXXX
Σ Qn : 23 kW (LPG)
26 kW (Natural Gas)

Nayati

PT NAYATI INDONESIA
Jl. Raya Terboyo 19
Semarang 50112
Indonesia

CE 0051- 12

G20: 2.75 m³/h | G25: 3.20 m³/h | G30: 1.81 kg/h | G31: 1.78 kg/h

		G20	G25	G30	G31	
LU-PL	I2E	20	/	/	/	mbar
IS-MT-HU	I3B/P	/	/	30	30	mbar
IT-PT-ES-IE-CH-GB GR-CY-CZ-SK-SI-TR	II2H3+	20	/	28-30	37	mbar
FI-TR-SK-LV-LT-EE-DK-SE SI-NO-RO-GR-CY-BG-HR	II2H3B/P	20	/	30	30	mbar
AT-CH-SK	II2H3B/P	20	/	50	50	mbar
NL	II2L3B/P	/	25	30	30	mbar
FR-BE	II2E+3+	20	25	28-30	37	mbar
RO	II2E3B/P	20	/	30	30	mbar

REGULATED FOR:

Model : NGER 15 - 60
TYPE : A1
S/N : XXXXX
Σ Qn : 34.5 kW (LPG)
39 kW (Natural Gas)

Nayati

PT NAYATI INDONESIA
Jl. Raya Terboyo 19
Semarang 50112
Indonesia

CE 0051-12

G20: 4.12 m³/h | G25: 4.80 m³/h | G30: 2.72 kg/h | G31: 2.68 kg/h

		G20	G25	G30	G31	
LU-PL	I2E	20	/	/	/	mbar
IS-MT-HU	I3B/P	/	/	30	30	mbar
IT-PT-ES-IE-CH-GB GR-CY-CZ-SK-SI-TR	II2H3+	20	/	28-30	37	mbar
FI-TR-SK-LV-LT-EE-DK-SE SI-NO-RO-GR-CY-BG-HR	II2H3B/P	20	/	30	30	mbar
AT-CH-SK	II2H3B/P	20	/	50	50	mbar
NL	II2L3B/P	/	25	30	30	mbar
FR-BE	II2E+3+	20	25	28-30	37	mbar
RO	II2E3B/P	20	/	30	30	mbar

REGULATED FOR:

Model : NGER 7 - 70
TYPE : A1
S/N : XXXXX
Σ Qn : 11.5 kW (LPG)
13 kW (Natural Gas)

Nayati

PT NAYATI INDONESIA
Jl. Raya Terboyo 19
Semarang 50112
Indonesia

CE 0051-12

G20: 1.37 m³/h | G25: 1.60 m³/h | G30: 0.91 kg/h | G31: 0.89 kg/h

		G20	G25	G30	G31	
LU-PL	I2E	20	/	/	/	mbar
IS-MT-HU	I3B/P	/	/	30	30	mbar
IT-PT-ES-IE-CH-GB GR-CY-CZ-SK-SI-TR	II2H3+	20	/	28-30	37	mbar
FI-TR-SK-LV-LT-EE-DK-SE SI-NO-RO-GR-CY-BG-HR	II2H3B/P	20	/	30	30	mbar
AT-CH-SK	II2H3B/P	20	/	50	50	mbar
NL	II2L3B/P	/	25	30	30	mbar
FR-BE	II2E+3+	20	25	28-30	37	mbar
RO	II2E3B/P	20	/	30	30	mbar

REGULATED FOR:

Model : NGER 13 - 70
TYPE : A1
S/N : XXXXX
Σ Qn : 23 kW (LPG)
26 kW (Natural Gas)

Nayati

PT NAYATI INDONESIA
Jl. Raya Terboyo 19
Semarang 50112
Indonesia

CE 0051-12

G20: 2.75 m³/h | G25: 3.20 m³/h | G30: 1.81 kg/h | G31: 1.78 kg/h

		G20	G25	G30	G31	
LU-PL	I2E	20	/	/	/	mbar
IS-MT-HU	I3B/P	/	/	30	30	mbar
IT-PT-ES-IE-CH-GB GR-CY-CZ-SK-SI-TR	II2H3+	20	/	28-30	37	mbar
FI-TR-SK-LV-LT-EE-DK-SE SI-NO-RO-GR-CY-BG-HR	II2H3B/P	20	/	30	30	mbar
AT-CH-SK	II2H3B/P	20	/	50	50	mbar
NL	II2L3B/P	/	25	30	30	mbar
FR-BE	II2E+3+	20	25	28-30	37	mbar
RO	II2E3B/P	20	/	30	30	mbar

REGULATED FOR:

Model : NGER 20 - 70
TYPE : A1
S/N : XXXXX
Σ Qn : 34.5 kW (LPG)
39 kW (Natural Gas)

Nayati

PT NAYATI INDONESIA
Jl. Raya Terboyo 19
Semarang 50112
Indonesia

CE 0051-12

G20: 4.12 m³/h	G25: 4.80 m³/h	G30: 2.72 kg/h	G31: 2.68 kg/h

		G20	G25	G30	G31	
LU-PL	I2E	20	/	/	/	mbar
IS-MT-HU	I3B/P	/	/	30	30	mbar
IT-PT-ES-IE-CH-GB GR-CY-CZ-SK-SI-TR	II2H3+	20	/	28-30	37	mbar
FI-TR-SK-LV-LT-EE-DK-SE SI-NO-RO-GR-CY-BG-HR	II2H3B/P	20	/	30	30	mbar
AT-CH-SK	II2H3B/P	20	/	50	50	mbar
NL	II2L3B/P	/	25	30	30	mbar
FR-BE	II2E+3+	20	25	28-30	37	mbar
RO	II2E3B/P	20	/	30	30	mbar

REGULATED FOR:

Model : NGER 13 - 130
TYPE : A1
S/N : XXXXX
Σ Qn : 46 kW (LPG)
52 kW (Natural Gas)

Nayati

PT NAYATI INDONESIA
Jl. Raya Terboyo 19
Semarang 50112
Indonesia

CE 0051-12

G20: 5.50 m³/h	G25: 6.40 m³/h	G30: 3.62 kg/h	G31: 3.57 kg/h

		G20	G25	G30	G31	
LU-PL	I2E	20	/	/	/	mbar
IS-MT-HU	I3B/P	/	/	30	30	mbar
IT-PT-ES-IE-CH-GB GR-CY-CZ-SK-SI-TR	II2H3+	20	/	28-30	37	mbar
FI-TR-SK-LV-LT-EE-DK-SE SI-NO-RO-GR-CY-BG-HR	II2H3B/P	20	/	30	30	mbar
AT-CH-SK	II2H3B/P	20	/	50	50	mbar
NL	II2L3B/P	/	25	30	30	mbar
FR-BE	II2E+3+	20	25	28-30	37	mbar
RO	II2E3B/P	20	/	30	30	mbar

REGULATED FOR:

Model : NGER 20 - 130
TYPE : A1
S/N : XXXXX
Σ Qn : 69 kW (LPG)
78 kW (Natural Gas)

Nayati

PT NAYATI INDONESIA
Jl. Raya Terboyo 19
Semarang 50112
Indonesia

CE 0051-12

G20: 8.25 m³/h	G25: 9.60 m³/h	G30: 5.44 kg/h	G31: 5.35 kg/h

		G20	G25	G30	G31	
LU-PL	I2E	20	/	/	/	mbar
IS-MT-HU	I3B/P	/	/	30	30	mbar
IT-PT-ES-IE-CH-GB GR-CY-CZ-SK-SI-TR	II2H3+	20	/	28-30	37	mbar
FI-TR-SK-LV-LT-EE-DK-SE SI-NO-RO-GR-CY-BG-HR	II2H3B/P	20	/	30	30	mbar
AT-CH-SK	II2H3B/P	20	/	50	50	mbar
NL	II2L3B/P	/	25	30	30	mbar
FR-BE	II2E+3+	20	25	28-30	37	mbar
RO	II2E3B/P	20	/	30	30	mbar

Figure 2:

Technical Plate reports warnings in European languages and destined languages.

Fig. 2

DE	"Dieses Gerat muB nach geltenden Vorschriften angeschlossen und darf nur in einem gut belufteten Raum betrieben werden . Bitte beachten Sie vor Inbetriebnahme des Gerates die Gebrauchs- und Wartungsanleitung."
FR	"L'appareil doit être raccordé conformement aux normes en vigueur et il ne doit être installé que dans locaux bien aérés. Faire attention aux instructions relatives a l'utilisation et l'entretien de l'appareil avant de le mettre en marche."
ES	"El apparato debe ser conectado conforme a las normas vigentes y se tiene que instalar solo en locales bien aireados. Préstese especial atención a las instrucciones para el luso y mantenimiento del apparato antes de ponerlo en marcha."
GB	"The appliance must be connected according to the standards in force and must be installed only in well aired premises. It is recommended to follow the use and servicing instructions of the appliance before operating it."
IT	"L'apparecchio deve essere allacciato conformemente alle norme in vigore e deve essere installato solo in locali ben aerati. Si presti particolare attenzione alle istruzioni per l'uso e la manutenzione dell'apparecchio prima di metterlo in funzione."

Figure 3:

Technical plate reports warning and current setting on appliance packaging.

Fig. 3

GB	II2H3+	G20 ; 2H ; 20 mbar ☐ G30/G31 ; 3+ ; 28–30/37 mbar ☐
	This appliance must be installed according to the regulations in force and used only in a well aired place. Consult the instructions before installing and using this appliance. This package must be disposed according to the regulations in force.	

COMPONENT LIST

- NGER 60 SERIES

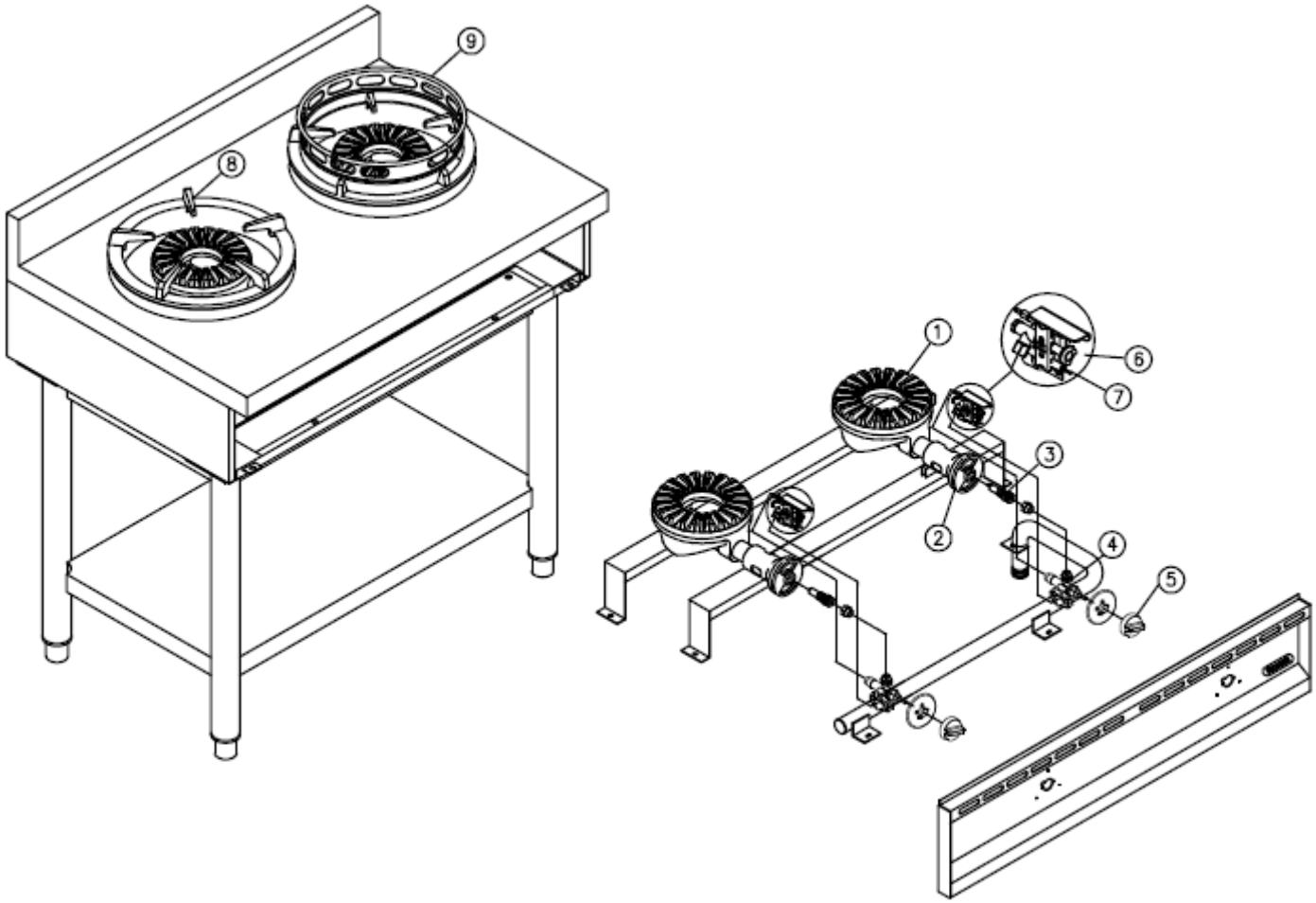

NO	PART NUMBER	DESCRIPTION	QTY NGER SERIE 60			
			4-60	9-60	15-60	20-60
1	GS.4023	Burner NS 9001	1	2	3	4
	GS.4030	Burner Head NS 9000	1	2	3	4
2	GS.4357B	Air Chamber Mixing Jumbo Burner	1	2	3	4
	GS.4358C	Primary Air Adjuster Plate	1	2	3	4
	GS.2826	Air Chamber Pipe 1”	1	2	3	4
3	GS.283D	Nozzle Jumbo D-1.80	1	2	3	4
	GS.283E	Nozzle Jumbo Burner D-3.05	1	2	3	4
4	GS.387B	Gas Valve w/ Clamp	1	2	3	4
5	PD.4052FA	Gas Knob dia.8mm	1	2	3	4
	PD.4055OB	Ring Label Api Model 1	1	2	3	4
6	GS.3851	Bunsen Pilot 3F/3H 0.20 LPG	1	2	3	4
7	GS.3895B	Thermocouple 600mm M9x1	1	2	3	4
8	GS.27020B	Pot Holder dia.280	1	2	3	4
9	GS.2718A	Wok Holder	1	2	3	4

- NGER 70 SERIES

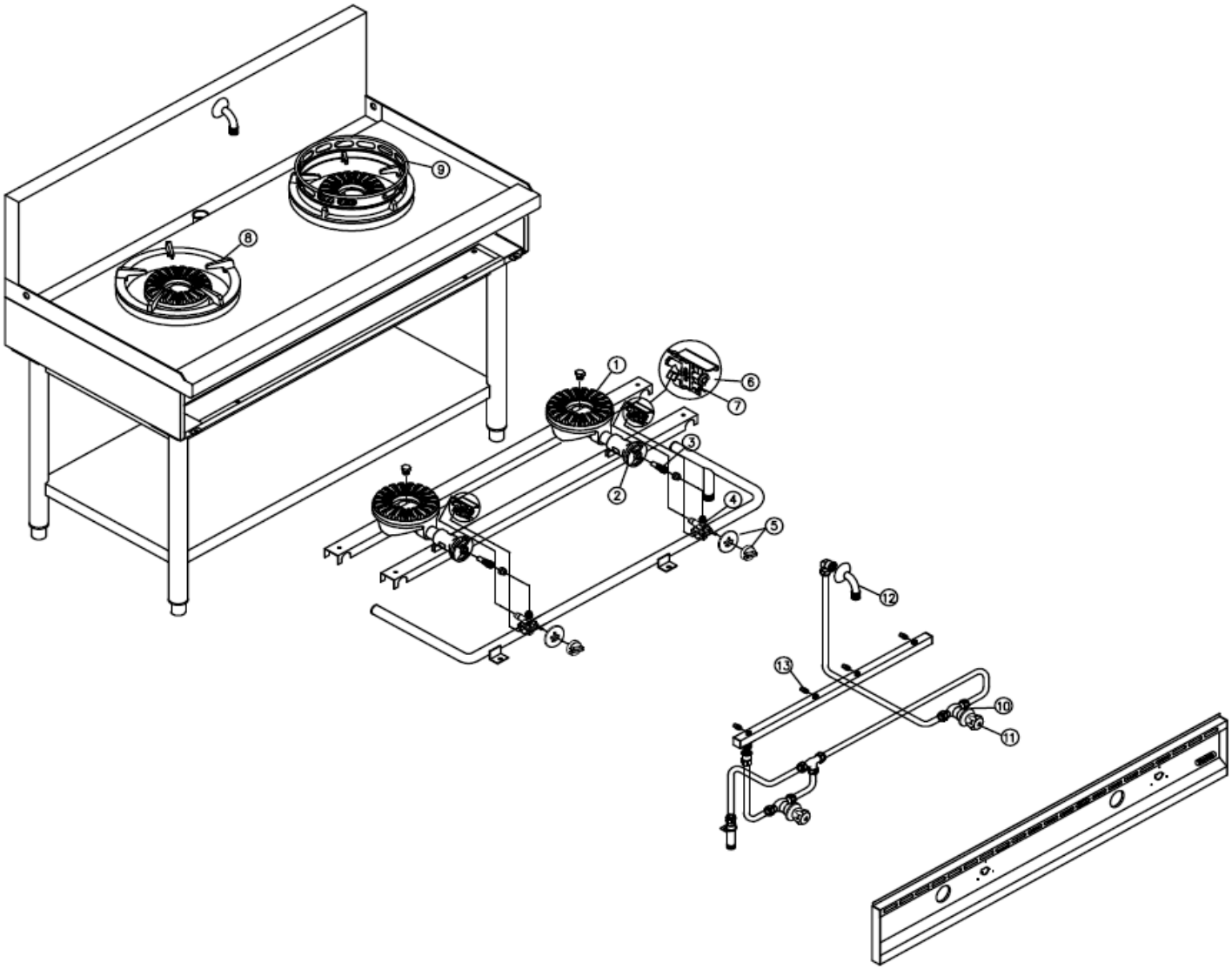

NO	PART NUMBER	DESCRIPTION	QTY NGER SERIE 70		
			7-70	13-70	20-70
1	GS.4023	Burner NS 9001	1	2	3
	GS.4030	Burner Head NS 9000	1	2	3
	GS.4232	Plug 3/8 x ¼ mm	1	2	3
2	GS.4357B	Air Chamber Mixing Jumbo Burner	1	2	3
	GS.4358C	Primary Air Adjuster Plate	1	2	3
	GS.2826	Air Chamber Mixing Jumbo Burner	1	2	3
3	GS.283D	Nozzle Jumbo D-1.80	1	2	3
	GS.283E	Nozzle Jumbo Burner D-3.05	1	2	3
4	GS.387B	Gas Valve w/ Clamp	1	2	3
5	PD.4052FA	Gas Knob dia.8mm	1	2	3
	PD.4055OB	Ring Label Api Model 1	1	2	3
6	GS.3851	Bunsen Pilot 3F/3H 0.20 LPG	1	2	3
7	GS.3895B	Thermocouple 600mm M9x1	1	2	3
8	GS.27020B	Pot Holder dia.280	1	2	3
9	GS.2718A	Wok Holder	1	1	2
10	GS.2305C	Faucet Stop Tap	2	2	3
11	GS.2458A2	Water Tap Head	2	2	3
12	GS.8046S	Short Faucet Wall Type Assy	1	1	2
13	GS.3857	Nozzle Spryer	2	4	6

- NGER 130 SERIES

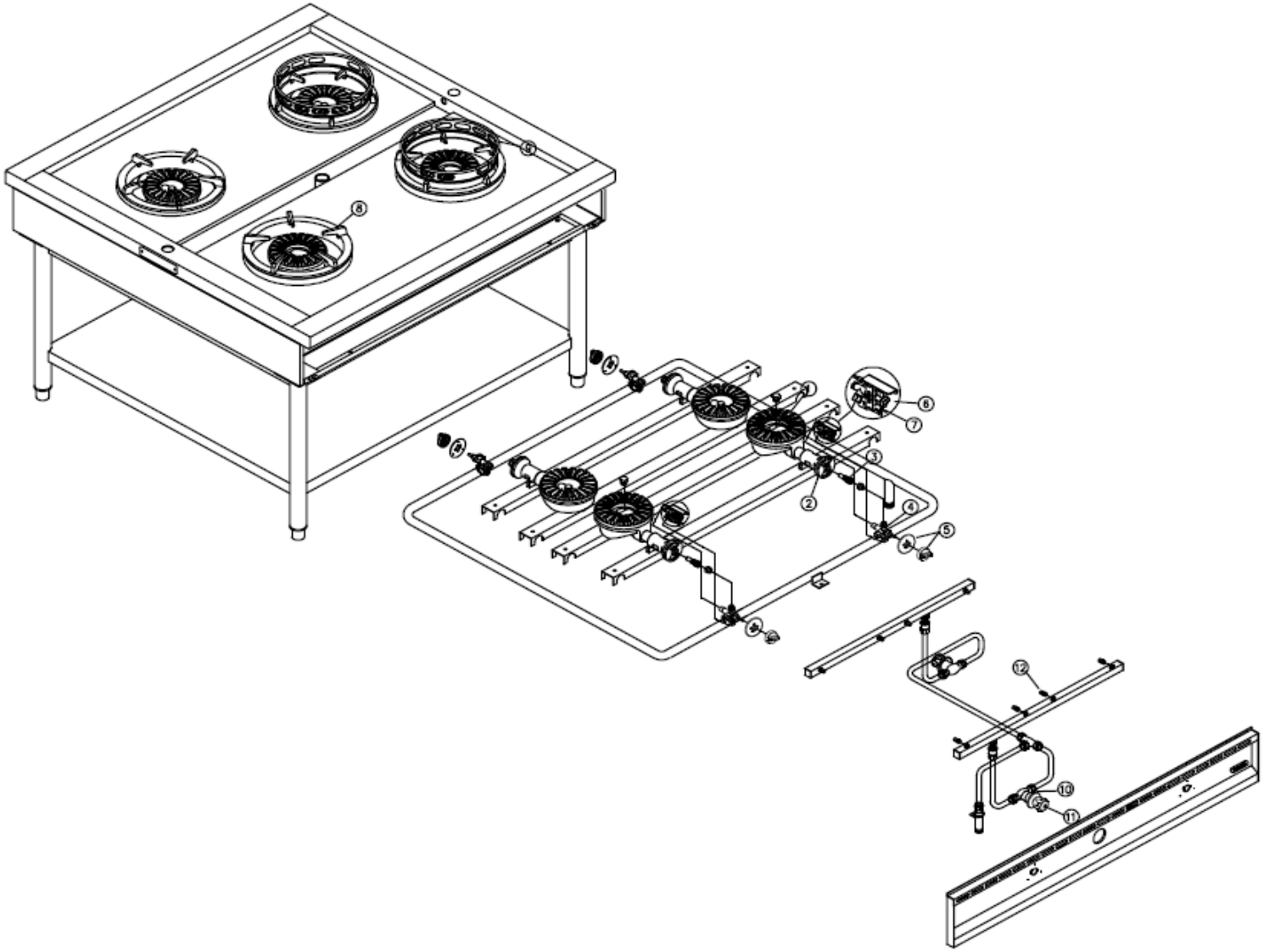

NO	PART NUMBER	DESCRIPTION	QTY NGER SERIE 130	
			13-130	20-130
1	GS.4023	Burner NS 9001	4	6
	GS.4030	Burner Head NS 9000	4	6
	GS.4232	Plug 3/8 x ¼ mm	4	6
2	GS.4357B	Air Chamber Mixing Jumbo Burner	4	6
	GS.4358C	Primary Air Adjuster Plate	4	6
	GS.2826	Air Chamber Mixing Jumbo Burner	4	6
3	GS.283D	Nozzle Jumbo D-1.80	4	6
	GS.283E	Nozzle Jumbo Burner D-3.05	4	6
4	GS.387B	Gas Valve w/ Clamp	4	6
5	PD.4052FA	Gas Knob dia.8mm	4	6
	PD.4055OB	Ring Label Api Model 1	4	6
6	GS.3851	Bunsen Pilot 3F/3H 0.20 LPG	4	6
7	GS.3895B	Thermocouple 600mm M9x1	4	6
8	GS.27020B	Pot Holder dia.280	4	6
9	GS.2718A	Wok Holder	2	3
10	GS.2305C	Faucet Stop Tap	2	2
11	GS.2458A2	Water Tap Head	2	2
12	GS.3847	Nozzle Spryer	8	12

Water System Components

- NGER 70 SERIES

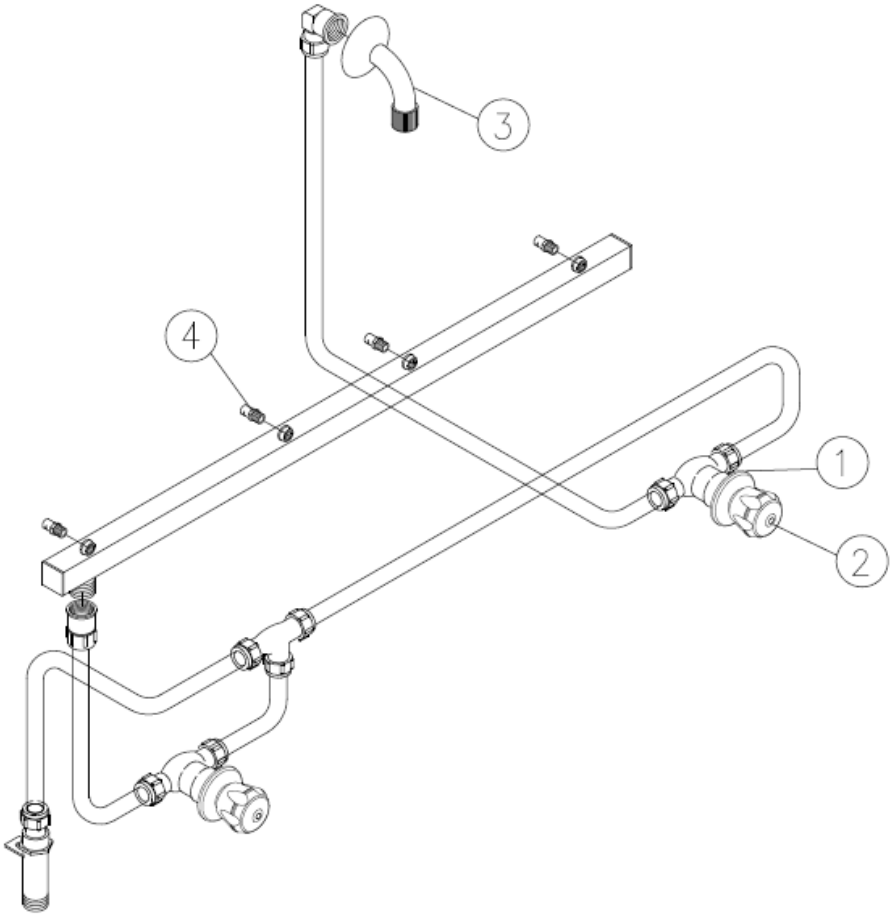

NO.	P/N	DESCRIPTION	QTY		
			NGER 7-70	NGER 13-70	NGER 20-70
1.	GS.2305C	Faucet Soptap w/ Plastic Handle	2	2	3
2.	GS.2458A2	Water Tap Head	2	2	3
3.	GS.8046S	Short Faucet Wall Type Assy	1	1	2
4.	GS.3847	Nozzle Spryer	2	4	6

- NGER 130 SERIES

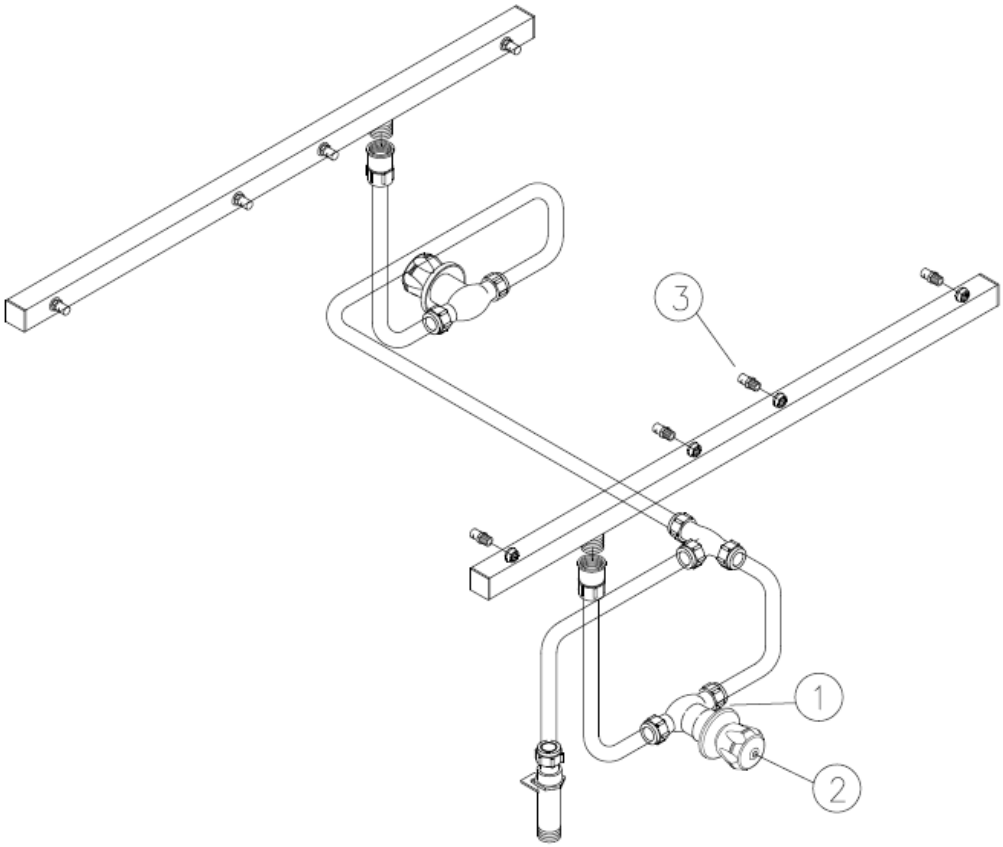

NO.	P/N	DESCRIPTION	QTY	
			NGER 13-130	NGER 20-130
1.	GS.2305C	Faucet Soptap w/ Plastic Handle	2	2
2.	GS.2458A2	Water Tap Head	2	2
3.	GS.3847	Nozzle Spryer	8	12

INSTALLATION (for the installer)

Very important!: Before installing, place the appliance on solid, flat, stable and horizontal surface and connection availability.

The following instructions are intended for authorized and qualified installer. Before doing installation, adjustment, and maintenance operations, the installer must follow local and legal regulations.

1. This appliance is using gas. Gas services should be installed according to:
   a. Local and international standards
   b. Local recommendation, such as building standards and recommendation concern with combustion
   c. Directions and regulations from the gas and power supply companies
   d. Regulation concern with prevention accident measures
2. Remove all packaging material and protective coatings.
3. Ensure gas supply is sufficient to operate this appliance.
4. Install the appliance by using Qualified Gas Filter.
5. Before testing, put the appliance in a good ventilated room and keep all flammable material away.
6. Take a leakage test by using soapy water solution. Spread the soapy solution on joints and pipe fitting. A leakage will be indicated by bubbles comes from the joints or pipefitting. Another way is by looking at the gas counter. If there is no movement on the gas counter, it means no gas leakage.
7. Before cleaning or maintaining the appliance, please isolate gas supply to the safe place.
8. Install the appliance by following Safe International Gas Standards.
9. If the appliance has not preset to the gas availability, you must convert it into another gas type. Authorized personnel must do this by referring to the technical data (primary air regulation and nozzle table), changing the main burner and pilot burner nozzles. Once this has been done, a new rating data plate should be affixed to the new data by referring to the new gas type.

Warning !

NEVER USE FREE FLAME TO FIND GAS LEAKS!

- Position and Fixing

Authorized personnel must do the installation. Install the appliance according to National Safety Standard about gas-heated standard. Place the appliance in good ventilated room with permanent ventilation ducts to guarantee sufficient exchange of air and keep the work place healthy. If the Gas Economic Range does not connected to a flue, it is recommended to install it under efficient hood, which could evacuate burned gases and cooking steams.

Below is construction type according to National Regulations:

- A_1: Appliance without fan and does not have connection to a flue or to a device for evacuating combustion products outside the room. The combustion air and burned gas mixed in one room.

Make sure that any object around or under Gas Economic Range does not obstruct air volume required for combustion. Put away any flammable materials near Gas Economic Range. When the appliance is freestanding, keep a distance at least 20 cm from side, and 10 cm from rear walls. Especially when the appliance close to wall and does not protected with fire-resistant materials made. Install the appliance separately or side by side with other appliance according to recommended range. Put Gas Economic Range on solid, flat, and horizontal floor. Adjust the height of the four feet by using brackets. Before turn the appliance ON, remove the protective film. Remove any adhesive with appropriate solvent. Eliminate all packaging material according to national laws.

- Gas Supply Connection

  - Before installing and connecting Gas Economic Range to gas supply, carefully control the fixed part of gas system, which conformed to National Building Regulation.
  - Verify gas pipes sections to guarantee sufficient supply for all gas heated appliances. Install it in similar condition to avoid excessive pressure drops.
  - The pipes must be made of steel (with junctions made using white cast iron, or galvanized steel fittings, or autogenously welded joints) or copper pipes (with mechanical joints and couplings without seals or mastics or brazed joints).
  - Control the gas bottle (if any) placed correctly and protected in dry area.
  - Check whether the gas pipes can easily inspected. If the pipes installed in floor and wall, make sure that this work done according to professional standard with reference points that make it possible to find the pipes.
  - Before installing Gas Economic Range, makes sure that it is set for the gas and pressure (see Technical Data Plates). Consult the paragraph “Gas Conversion.”
  - Connect Gas Economic Range to gas supply using solid fittings or flexible steel pipes with suitable sections related to nominal power and length.
  - Check whether the flexible pipes does not pass or near hot surfaces, put under stress and traction, contact with sharp edges, or other things that could damage the pipe.
  - Install quick ON – OFF valve between the gas mains and each single appliance where easy to reach.
  - After install Gas Economic Range safely, take a pressure test the whole gas circuit by using leak finder spray or non-corrosive foams.

- Checking Gas Pressure and Nominal Heat Input (Fig. 4)

For the first installation, specialized technician must control Gas Economic Range nominal heat input, maintenance, and gas conversion. DO NOT improve Gas Economic Range performance and increase nominal heat affirmed by the manufacturer. Control heat input by using gas counter and chronometer. Measure the exact amount of gas flow per unit of time which consumed by the appliance at maximum power. Compare the measurement to the consumption data on Data Technical Table 11, ± 5% tolerance is allowed. When you are measuring top deviations, carefully check the diameters and the quality of installed injectors and gas main pressure. If you want to measure the main pressure while Gas Economic Range is ON and using a pressure gauge for liquids (for example U manometer, with minimum resolution 0.1 mbar), please follow direction below:

1. Connect the flexible pipe “E” of the Manometer “M” to the inlet pressure point “C” after unscrewing its cap.
2. Measure the connection pressure: if the reading is not within the values given in the following table, the appliance cannot work properly. The gas company must be informed to find out the supply pressure problems. If necessary, install a pressure regulator.
3. Once the connection pressure has been measured, disconnect flexible pipe “E”, retighten the screw cap of the inlet pressure point “C”. Restore the components inversely.

Table 5:

Gas Type	Inlet pressure (mbar)		
	Normal	Minimal	Maximal
Natural gas G 20	20	18	25
Liquid gas G 30/ G 31	50	42.5	57.5

Fig. 4

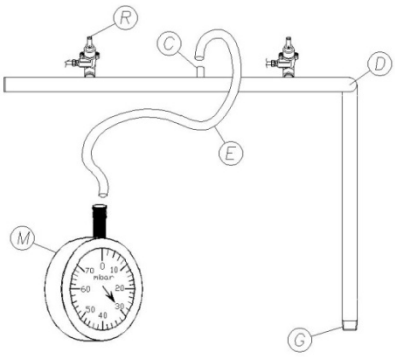

C	=	Inlet pressure point
D	=	Gas pipe
E	=	Flexible pipe
G	=	Inlet gas connection
M	=	Manometer
R	=	Gas tap

- Primary Air Adjuster

The Primary Air is fixed and sealed by the factory according to the destined country and the gas type. The adjustment is attached on the packing and the type shield. If there is any conversion, the Primary gas adjustment must follow the data table below:

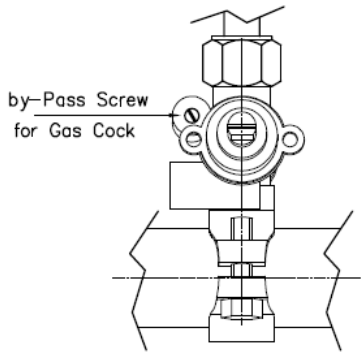

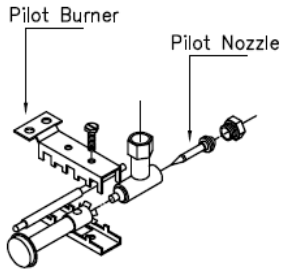

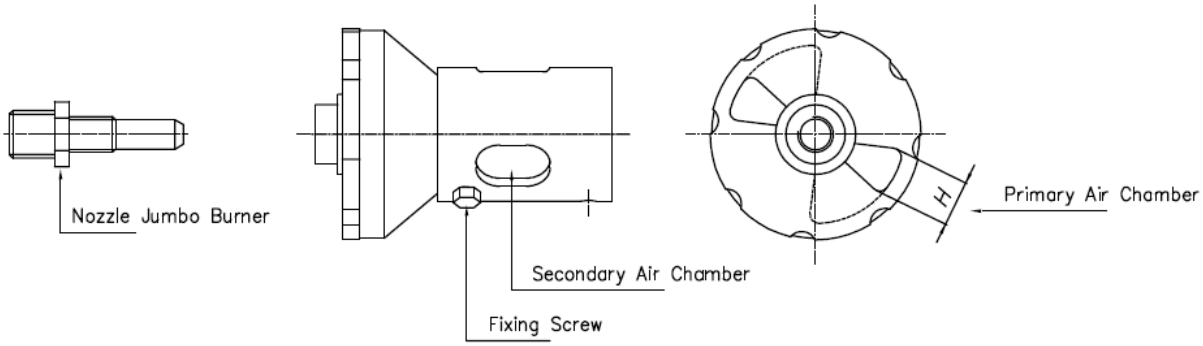

Burner	Gas Type	Pressure (mbar)	Nozzle Ø (mm)	Pilot Nozzle Ø (mm)	Primary Air Chamber H (mm)	Secondary Air Chamber	by-pass for Gas Cock
11.5kW	G30/31	28-30/37	1.80	0.20	22	Full Closed	Ø 1.10
		50/50	1.60	0.20	16	Full Closed	Ø 0.95
13kW	G20	20	3.05	Adjusted	12	Full Closed	Adjusted
	G25	20	3.30	Adjusted	12	Full Closed	Adjusted
		25	3.15	Adjusted	12	Full Closed	Adjusted

- Install Pipe Legs

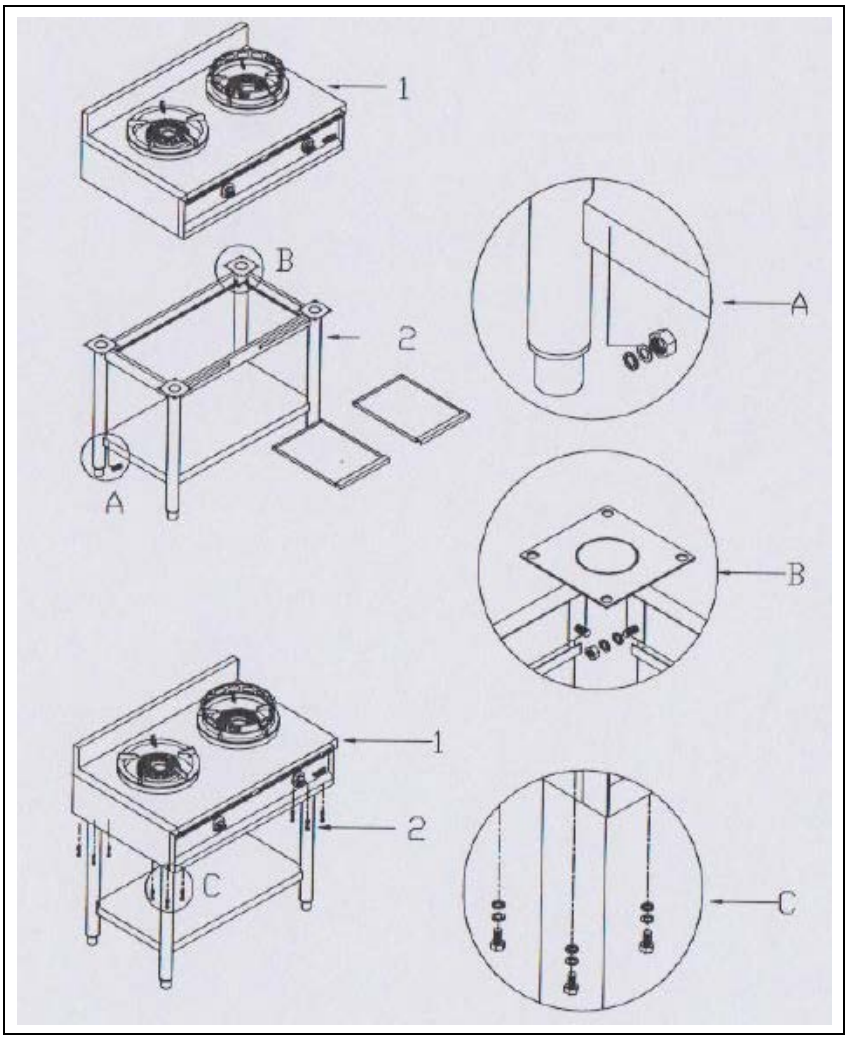

- Put 4 pipes on the under shelf

  Tightened with external tooth washer, flat washer and nut M8.

- Install (2 pcs side, 1 pc front, 1 pc back) stopper leg at the top of the pipe leg

  Tightened with external tooth washer, flat washer, and nut M6.

- Install body (no.1) and table (no.2)

  Tightened with external tooth washer, flat washer, and hexa M6.

USE INSTRUCTIONS (for user)

- Warning

This appliance is a gas cooker for professional use. It shall be used by authorized people only. Before starting, please make sure that the appliance is in good condition and put it in a good ventilated room. Below are several preliminaries warning that strictly conformed:

1. Check the electrical hood whether it is in good condition and make sure that the air volume required for combustion is not obstruct by any object around or under the appliance.
2. If there is a persistent breakdown, please contact authorized mechanic.
3. User is only responsible for daily routine cleaning for maintenance.
4. Qualified mechanics must do all operations related to installation and maintenance according to Regulation in force.
5. Use Gas Economic Range only to COOK FOOD: SHALLOW FRYING, SAUTEING, FRYING, and BOILING. DO NOT use Gas Economic Range for other purposes. Any other uses may be considered as improper and dangerous use. Please control the appliance when operating.
6. Before operating Gas Economic Range for the first time, carefully clean the appliance to remove industrial oil/ lubricant.
7. After using Gas Economic Range, close the gas valve at UP position.

- Turn ON / OFF Gas Economic Range

  - Turn ON Burner

    a. Open the gas valve to supply gas.

    b. Turn and hold the knob anticlockwise until heard sound ‘click’.

    c. Turn the knob clockwise to adjust the flame until heard sound ‘clicks’ for several times.

    d. If the flame fails to ignite, turn the knob to OFF position to stop the gas flow. Repeat the above steps (a, b, c).

  - Turn OFF Burner

    a. To extinguish the flame, turn the knob to OFF position.

    b. Close the gas supply.

ROUTINE CLEANING and MAINTENANCE

Clean the appliance to keep the functionality and durability. In the case of any failures, do not attempt to solve the problem but call your dealer immediately to ask for help. Do not attempt to dismantle the appliance, specialized mechanics must do all job.

For routine cleaning process, please follow procedure below and notice the warning:

1. Make sure the gas valve on UP position, the appliance is closed, and the entire burners are OFF (●).
2. Let the appliance cool.
3. Clean the steel part daily with warm soapy water, rinse and dry thoroughly. Please make sure that the cleaning product does not contain Chlorine (bleach, hydrochloric acid, etc), using steel wool, brushes, or scrappers that could leave ferrous particles. These materials could oxidize and causes rust on the appliance.
4. Clean the burners with mild detergent or using soap and water.
5. Check the burners whether the holes are clogged. If necessary, use steel wool pad to remove deposits without damaging any parts of pilot unit.
6. DO NOT leave acid food such as vinegar, salt, lemon, etc on the stainless steel parts because it can ruin them.
7. NEVER wash the appliance with direct high-pressure jet water.
8. If the cooker will not used for a long time, briskly rub the steel part slightly with a damp cloth and Vaseline oil. After that, wrap with protective film and put the appliance in a good ventilated room.

ATTENTION!

! If you find the lighting and control devices are difficult to use, please contact the manufacturer immediately, which will provide you necessary assistance.

! Please check the appliance periodically. Contact your dealer that will supply assistance to repair and set interval.

! Authorized and qualified personnel must do all service.

TROUBLE SHOOTING

NO.	PROBLEM	CAUSE	CORRECTIVE ACTION
1.	Pilot flame does not ignite	- Gas pipe to Pilot clogged	- Check and repair
		- Pilot clogged	- Check and repair
		- Pilot head clogged	- Clean with fine steel brush
		- Pilot nozzle clogged	- Check and replace
2.	Burner flame yellow	- Air regulation required	- Check and repair
		- Burner is dirty	- Check and clean with brush
3.	Burner does not ignite	- Gas valve damaged	- Check and replace
4.	Pilot flame does not keep lighting	- Thermocouple is dirty	- Check and clean with fine steel brush
		- Thermocouple does not produce voltage (mV)	- Check and repair
		- Thermocouple slacked	- Check and repair
		- Thermocouple magnet damaged	- Check and replace

WARRANTY

We give 12 months guarantee with certain conditions. We will decline any claims of accidents caused by improper use, disobey rules, and/ or disobey warnings. Below are cases, which invalidate the guarantee:

1. Improper use by untrained person(s)
2. Disobey local regulation(s) related to installation and safety standards
3. Not doing routine maintenance
4. Replace certain parts with non-genuine spare part
5. Do not follow the manual instructions properly

If you have any doubts or questions related to our product, please call your nearest dealer.