10/2017

Mod: WR-EP60-SS

Production code: PSF 600 E

Diverso by Diamond

MADE IN EUROPE

INSTRUCTIONS FOR USE AND INSTALLATION
CAST IRON GRIDDLE PLATES
PSF 400 E / PSF 600 E

Made in France

April 2013

CAST IRON GRIDDLE PLATES
PSF 400 E / PSF 600 E

Congratulations for the acquisition of this upmarket appliance made in France. You chose an appliance which alloys the best technical qualities with a big user-friendliness. We wish you the biggest contentment

1. SECURITY INSTRUCTIONS

Please respect these instructions scrupulously to avoid any risk of fire, electric shock, scald or other wounds and damage. During the use of this appliance, fundamental circumspection of security must always be noticed, such as:

- Take into account the instructions to be systematically kept with the appliance.
- Install the appliance always in instructions respect. A 10 cm distance minimum with the partition or the wall is necessary.
- Protect the appliance from direct light of the sun, frost and humidity.
- Never leave the appliance within the reach of children or disabled persons without surveillance.
- Never move the appliance when it is working or when the cooking surface is still hot.
- Check that the appliance is definitely off before connecting it up or disconnecting it.
- Do not touch the hot surfaces of the appliance. The temperature of the hot surfaces can be very important when the appliance is working. Always use handles and control knobs.
- Do not use the appliance for other functions than determined use.
- Do not leave the cord of electrical feeding in the contact of hot surfaces.
- The appliance should not be used close to combustible materials.
- During use, look after not to obstruct hearings of aeration of the appliance
- To avoid any electric shock, never plunge the appliance, the cord or plug in water or quite other liquid.
- If the cord is harmed, it must be replaced by the producer, his after sale service or persons of similar skills to avoid any risk.
- Entrust compensations only to a skilled person.
- Use only spare parts of origin.
- At the end of cooking, before cleaning the appliance, do not forget to disconnect it.

2. CONTENTS OF CARDBOARD PACKAGING

Device: A cast iron griddle plate
Accessories: - The present note

See exploded views for PSF 400 E / PSF 600 E at the end of the document

3. CONFORMITY OF USE

Use the device only to cook meat, bacon, fish, hamburgers, sausages, onions... and also for fried eggs and omelettes…

4. WAY OF FUNCTIONING

This griddle plate is fitted with cast iron plate. After 15 minutes preheating, the cast iron plate reaches a homogeneous temperature on the whole cooking surface thanks to incoloy heating elements (1 for PSF 400 E and 2 for PSF 600 E).

To turn on and preheat the plates, just turn the thermostat control knob (n°3 on picture) on the wished position. The green pilot light ignites (n°1 on picture), the device is on and the orange pilot light ignites (n°2 on picture), plate is heating.
When orange pilot light switches off, the device is ready for the cooking.

During cooking, the temperature can be regulated thanks to thermostat control knob (n°3 on picture) to avoid phenomenon of overheating. Orange pilot light indicates heating periods.

Meat is cooked at a temperature around 250-300°C.

Your machine is fitted with a removable juice collector tray (n°5 on picture) for the evacuation of cooking juices and fat. It must be regularly emptied. It is recommended to pour some water into the drip tray at the beginning of cooking to facilitate the cleaning and avoid the solidification and the accumulation of fat in the drip tray

Never use the machine without the collector tray (n°5 on picture).

1 On/off pilot light

2 Thermostatic pilot light

3 Thermostat

4 Outlet for juices and fats

5 Juice collector tray

5. FUNCTIONING / MANIPULATION

a) Installation / assembly:

- Unpack carefully the device of its packaging.
- Place the griddle plate on a plane and heatproof surface.
- Never place the device near a wall or near a partition makes of combustible materials even if it is very well isolated.
- A distance of minimum 10 cm with the partition or the wall is necessary.
- Remove the protective film around the machine.

b) First starting:

Before the first use, remove the anti-corrosion protection fat with a cleaner. Then, it is necessary to grease plates with oil.
During the first use, warm your machine up outside during about 30 min to evacuate residual smokes of manufacturing oil from the metallic parts. This may emit a slight smell for a few moments.

First cleaning

Clean the device before the first use. (See 6 Cleaning)

Connection of the device

- Check that the tension and the frequency of the electricity network suit to the values indicated on the descriptive plate.
- Make sure that every control knob is positioned on 0.
- Check that neither the cord nor the plug are damaged
- Unwind completely the electric power cable and connect it in a plug connected with the earth.
- The device is connected.

NB: in case of connection of the device in a plug without earth protection or directly on the electricity network, confide its connection to a qualified person .

c) Use of device :

Elements of command and display

Command/Display	Function
Thermostat (n°3 on picture)	On/off + Temperature setting
Green pilot light (n°1 on picture)	Machine on (pilot light on) Machine off (pilot light off)
Orange pilot light (n°2 on picture)	Machine is heating (pilot light on) Temperature reached (pilot light off)

Never use the machine without its drip tray (n°5 on picture).

Putting on

Turn on the thermostat control knob (n°3 on picture) on the wished position: the green pilot light (n°1 on picture) and the orange pilot light (n°2 on picture) ignite. The machine is warming up. Once orange pilot light (n°2 on picture) is off, the machine reached the wished temperature.
Grease the plates before each cooking.

Temperature setting

Set the temperature by positioning the thermostat (n°3 on picture) to the desired temperature. The orange pilot light (n°2 on picture) switches on if a higher level of temperature is required and switches off when the same is reached.

It is not necessary to leave the device switched on at full power. It is necessary to adapt the temperature to products to be cooked to limit the energy consumption.
If your food sticks on the plate, reduce the temperature of the thermostat

Stopping the appliance

Set each control knob (n°3 on picture) on 0: the green pilot light (n°1 on picture) switches off. The appliance is no longer functioning.
Let the device cool
Disconnect the power cable.
Clean the appliance. (see 6. Cleaning)
Grease the plate

d) Breakdown / repair:

In case of breakdown or of damaged part, please call your after-sales service and confide any technical operation to qualified person.

When you contact the after-sales service of your distributor or your store, give him the complete reference of your device (commercial name, type and serial number). This information appears on the visible descriptive plate behind the device.

6. CLEANING AND MAINTENANCE

Disconnect the device.

- Let cool completely the device before any technical intervention or cleaning.
- For cleaning of plate, only use non-abrasive products, clean regularly the external walls of your device with warm water and wash liquid: avoid the abrasive towelling. Rinse your device with a wet sponge.
- Remove and empty the tray (n°5 on picture) filled with fats and cooking juice.
- Clean the tray (n°5 on picture) with a wet sponge and some dishwashing liquid (can also be washed in a machine) and wipe.
- After the tray (n°5 on picture) dries, put it back in the appliance.

- Clean the outer case of the appliance without using any abrasive product.
- Never clean the appliance under a water jet, the infiltrations may cause irreparable damage to the appliance.
- Never immerse the appliance, cord or plug in water or any other liquid to avoid any electric shock.

Attention to the capacity of the drip tray (n° 5 on picture): consider emptying it regularly, any overflowing inside the appliance may cause irreparable damage.

During a prolonged non-use, we recommend you strongly to keep the device shielded from the humidity and to grease the plate.

7. TECHNICAL SPECIFICATIONS

Models	PSF 400 E	PSF 600 E
Outside dimensions	400x475x230 mm	600x475x230 mm
Cooking surface	400x400 mm	600x400 mm
Weight	19 Kg	29 Kg
Power	3000 W	2 x 3000 W
No element	1	2
Current	13 A	2 x 13 A
Voltage	220-240 V ~	380-415 V 3 N ~

Wires colours correspondence	Phase 1	Brown
	Phase 2	Black
	Phase 3	Grey
	Neutral	Blue
	Earth	Yellow-Green

The equipotential connection marked by this symbol must be linked with the equipotential conductive connection of your installation by means of a minimum conduction of a 2.5 mm² section.

8. NORMS AND LEGALS DISPOSALS

The device is conform to :

IEC/EN 60335-1
IEC/EN 60335-2-38
EN 55014-1 + 55014-2
EN 61000-3-2 + 61000-3-3

Humidity protection degrees IPX4, in conformity with the norm 60335-2-38 (2008)

9. ELIMINATION OF THE ELECTRIC AND ELECTRONIC WASTE

The device respects the directives:

2002/96/CE (DEEE) N°34270064800021
2002/95/CE (ROHS)
2066/95 CE
2004/108 CE

Reach rule
Never put the device among household waste.
The device must be put down in a centre of recycling for the electric equipments.

The materials of the device are indeed reusable. By eliminating correctly the electric and electronic wastes, the recycling and quite other shape of re-use of worn equipments, you participate in a significant way in the environmental protection.
For any information about the collection of electric and electronic waste, please contact your distributor.

10. GUARANTEE

Conditions of guarantee

The guarantee applicable to any device is the commercial guarantee of the distributor or the retailer. Please contact the store where you bought your device to know the precise conditions.

The guarantee grants no right for damages.

The dispositions which follow are not exclusive of the profit of the legal guarantee planned by articles 1641 and following ones of the Civil code relative to the defects and the latent defects.

Exclusion clauses of the guarantee

Bad installation and bad maintenance, in particular if they do not respect current regulations or instructions appearing in this user guide.

Cannot benefit from the guarantee the repairs required as a result of false operations, of inappropriate use, of carelessness or of excess loads of the device, as well as those resulting from variations of the power supply, over tension or from defective installations.

The damage due to shocks, bad weather is not flatware by the guarantee. The material travels at the risks of the user; in case of delivery by carrier, the consignee has to have reservations towards the carrier before any delivery of the device.

The guarantee comes to an end in case of intervention, of repair, of modification by no qualified persons, or of use in inappropriate purposes.

Nomenclature **PSF 400 E**
Spare parts **PSF 400 E**

Rep	Code	Qty	Pièce	Spare part
1	B02027+PTR	1	Plaque fonte	Cast iron plate
2	53184	1	Cadre	Frame
3	53122	1	Bandeau	Front panel
4	A01020	1	Commutateur	Commutator
5	A06032	1	Thermostat	Thermostat
6	A08009	1	Voyant vert	Green pilot light
7	A14113	1	Bouton	Knob
8	A08003	1	Voyant orange	Orange pilot light
9	A13017	2	Pied	Foot
10	D02105	1	Résistance blindée	Armoured heating element
11	49018	1	Serre résistance	Element holder
12	53185	1	Tôle protection composants	Components protection plate
13	A16013	1	Bornier 3 plots	3 holes domino
14	53121	1	Ceinture	Casing
15	53183SE	1	Bac à jus	Juice tray
16	C03007	1	Cordon avec prise	Cord with plug
17	A10032	1	Serre cable	Cord closer 16
18	53114SE	1	Bac à sauce	Drip tray
19	53123	1	Fond socle	Bottom casing
20	A13012	2	Verrin 10 x 20	Jack 10 x 20
21	53116	1	Ecran protection sauce	Sauce protection screen

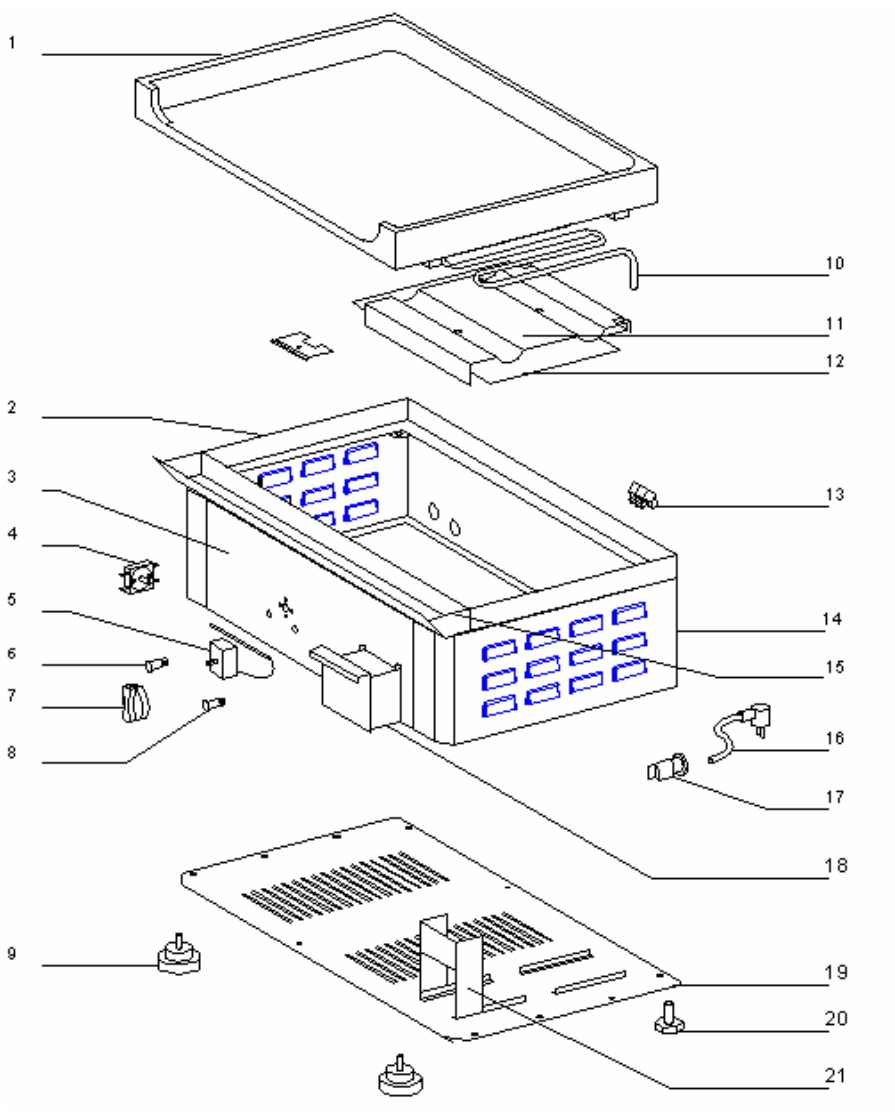
1
2
3
4
5
6
7
8
9
10
11
12
13
14
15
16
17
18
19
20
21

Nomenclature **PSF 600 E**
Spare parts **PSF 600 E**

Rep	Code	Qty	Pièce	Spare part
1	B02026+PTR	1	Plaque fonte	Cast iron plate
2	53187	1	Cadre	Frame
3	53118	1	Bandeau	Front panel
4	A01020	2	Commutateur	Commutator
5	A06032	2	Thermostat	Thermostat
6	A08009	2	Voyant vert	Green pilot light
7	A14113	2	Bouton	Knob
8	A08003	2	Voyant orange	Orange pilot light
9	A13017	2	Pied	Foot
10	D02105	2	Résistance blindée	Armoured heating element
11	49018	2	Serre résistance	Element holder
12	53188	1	Tôle protection composants	Components protection plate
13	A16014	1	Bornier 6 plots	6 holes domino
14	53111	1	Ceinture	Casing
15	53186SE	1	Bac à jus	Juice tray
16	C01045	1	Cable	Cord
17	A10032	1	Serre cable	Cord closer 16
18	53114SE	1	Bac à sauce	Drip tray
19	53112	1	Fond socle	Bottom casing
20	A13012	2	Verrin 10 x 20	Jack 10 x 20
21	53116	1	Ecran protection sauce	Sauce protection screen

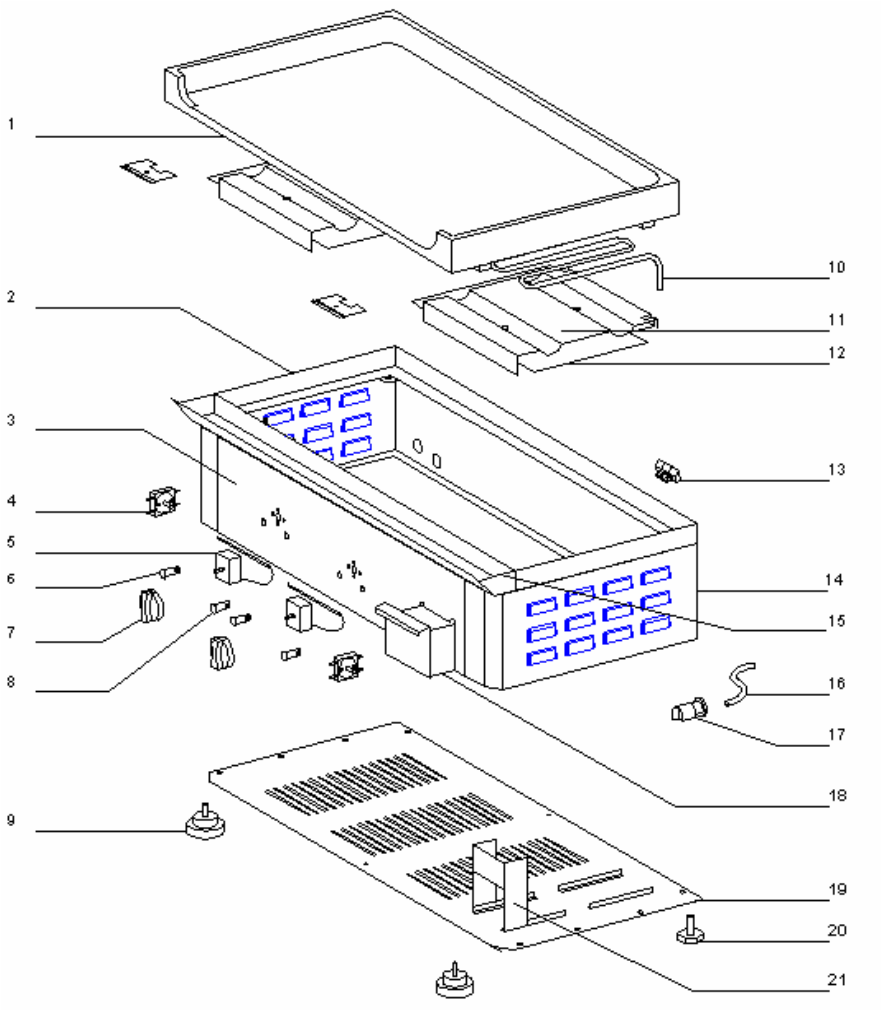
1
2
3
4
5
6
7
8
9
10
11
12
13
14
15
16
17
18
19
20
21