02/2016

Mod: AC101

Production code: 922112

Diamond
catering equipment

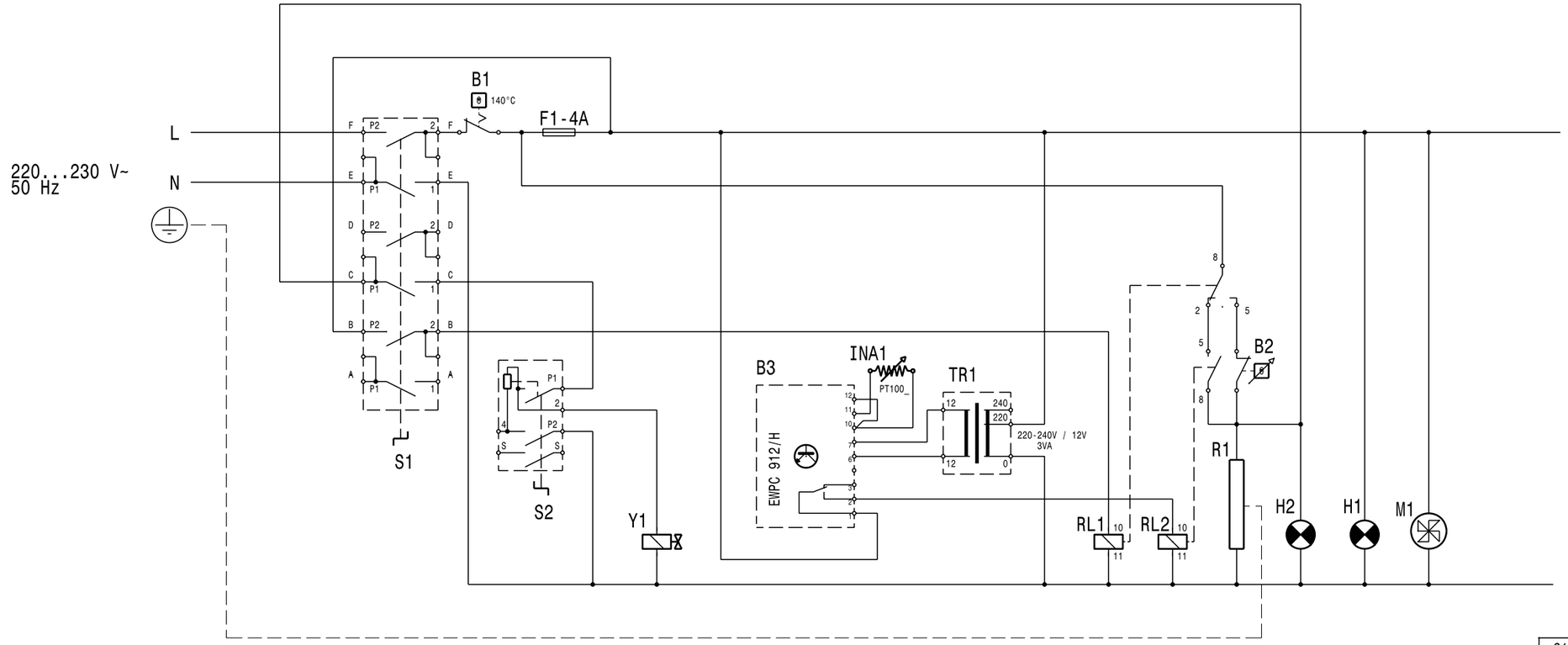

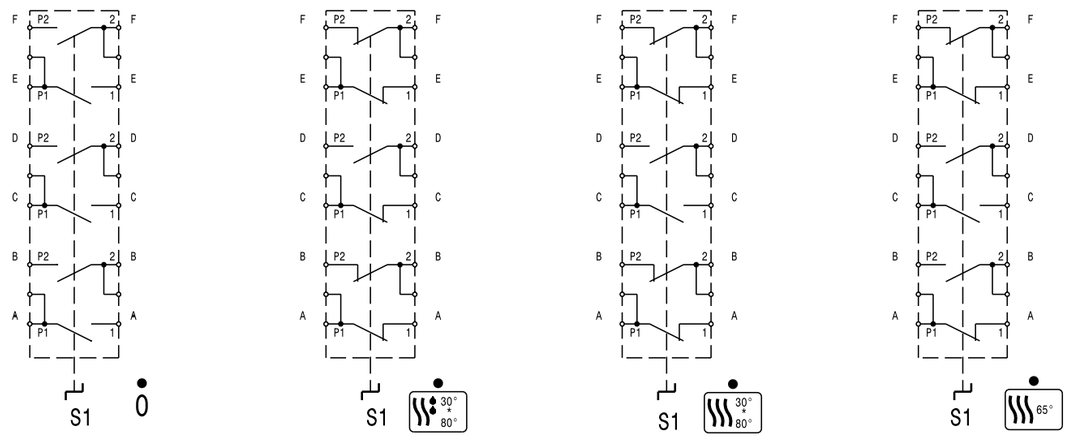

S1 - COMMUTATORE/ROTARY SWITCH	
EGO TYPE	DREEFS TYPE
CONTATTI DEI TERMINALI/TERMINAL MATCHING	
P1-1 (A)	5-5a
P2-2 (A)	6-6a
P1-1 (B)	7-7a
P1-1 (C)	1,2 - 1a,2a
P2-2 (C)	3-3a

	DESCRIZIONE	DESCRIPTION	DESCRIPTION	BESCHREIBUNG
B1	LIMITATORE SICUREZZA CELLA	CAVITY SAFETY THERMOSTAT	LIMITATEUR TEMPERATURE CHAMBRE CUISSON	TEMPERATURBEGRENZER GARRAUM
B2	TERMOSTATO CELLA 30*80 °C	CAVITY THERMOSTAT 30*80 °C	THERMOSTAT CHAMBRE CUISSON 30*80 °C	GARRAUMTHERMOSTAT 30*80 °C
B3	TERMOMETRO DIGITALE & TERMOSTATO MANTENIMENTO CELLA 65	DIGITAL THERMOMETER & 65° C THERMOSTAT CONTROL	THERMOSTAT MAINTIEN TEMPERATURE ETUVE	ELEKTRONISCHES THERMOSTAT AUF 65 °C EINGESTELLT
H1	LAMPADA "MACCHINA SOTTO TENSIONE"	SIGNAL LAMP "UNIT LIVE"	LAMPE TEMOIN DU INTERRUPTEUR GENERAL	SIGNALLAMPE HAUPTSHALTER
H2	LAMPADA "RESISTENZA ACCESA"	SIGNAL LAMP "HEATING ON"	LAMPE TEMOIN DU THERMOSTAT	THERMOSTAT LAMPE
M1	MOTORE VENTILATORE CELLA	CAVITY FAN MOTOR	MOTEUR VENTILATEUR CHAMBRE CUISSON	LUFTERMOTOR GARRAUM
Y1	ELETTOVALVOLA UMIDIFICATORE	HUMIDIFIER SOLENOID VALVE	ELECTROVANNE HUMIDIFICATION	ELEKTROVENTIL GARRAUMBESCHWADUNG
S1	SELETTORE CICLI	CYCLE SELECTOR	SELECTEUR DE CUISSON	PROGRAMMSCHALTER
S2	REGOLATORE D'ENERGIA	ENERGY REGULATOR	REGULATEUR D'ENERGIE	ENERGIEREGLER
R1	RESISTENZA CELLA	CAVITY HEATING ELEMENT	RESISTANCE CHAMBRE CUISSON	GARRAUMHEIZELEMENT
RL1-2	RELE'	RELAY	RELAIS	RELAIS
F1	FUSIBILE	FUSE	FUSIBLE	SICHERUNGEN
INA1	SONDA TERMOSTATO E TERMOMETRO DIGITALE	DIGITAL THERMOSTAT PROBE	SONDE THERMOSTAT DE MANTIEN TEMPERATURE	TEMPERATUFUHLER ELEKTRONISCHES THERMOSTAT
TR1	TRASFORMATORE	TRANSFORMER	TRANSFORMATEUR	TRANSFORMATOR

-

Mod. : SCHEMA ELETTRICO BASE ARMADIO CALDO 101 & 102	From s.n.:	N°: 602842400