11/07/2019

Mod: MACRO42-N

Production code: TZ420/1M-HL

Diamond

AC 3 N 400 50/60 Hz

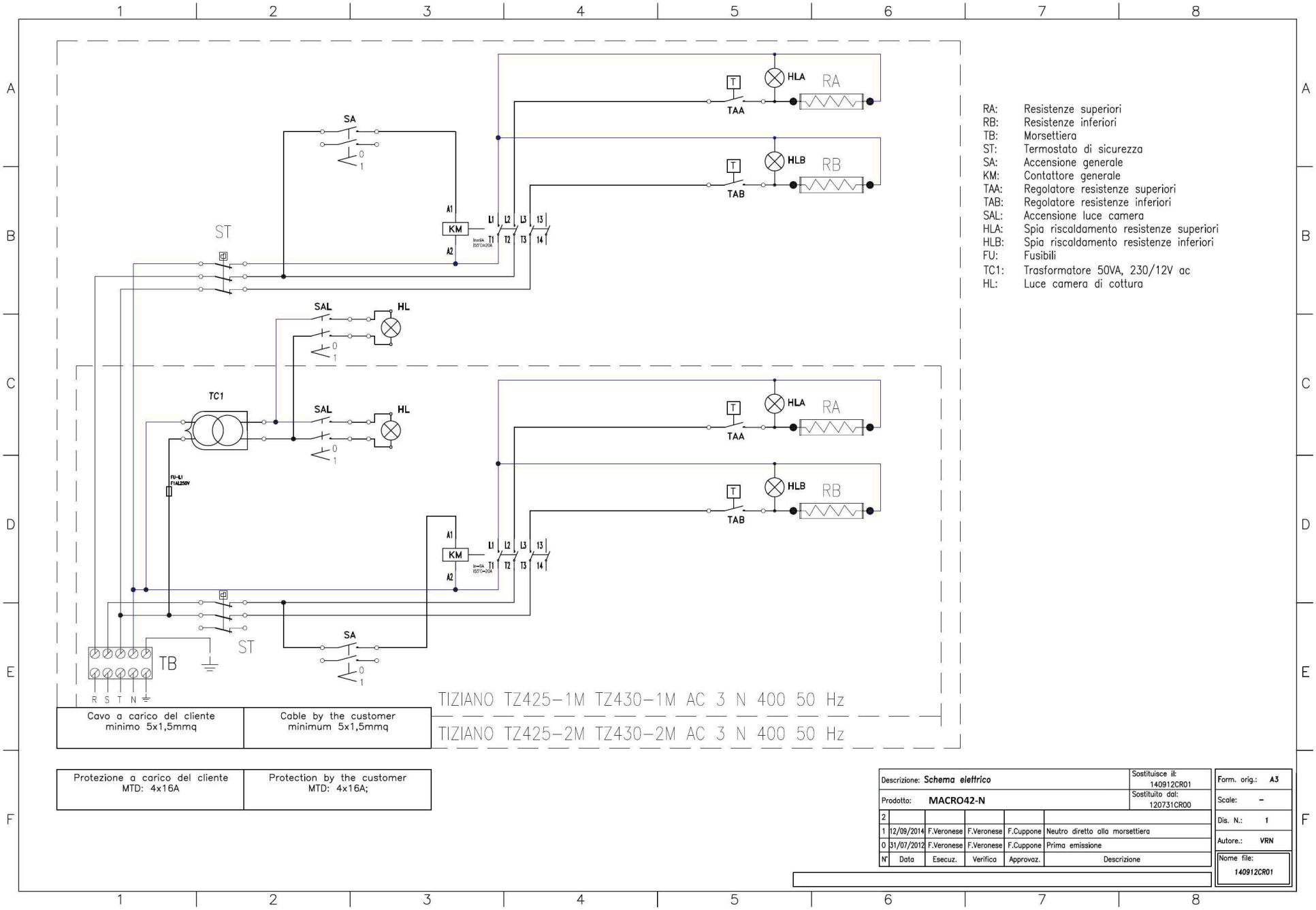

AC 3 230V 50/60 Hz

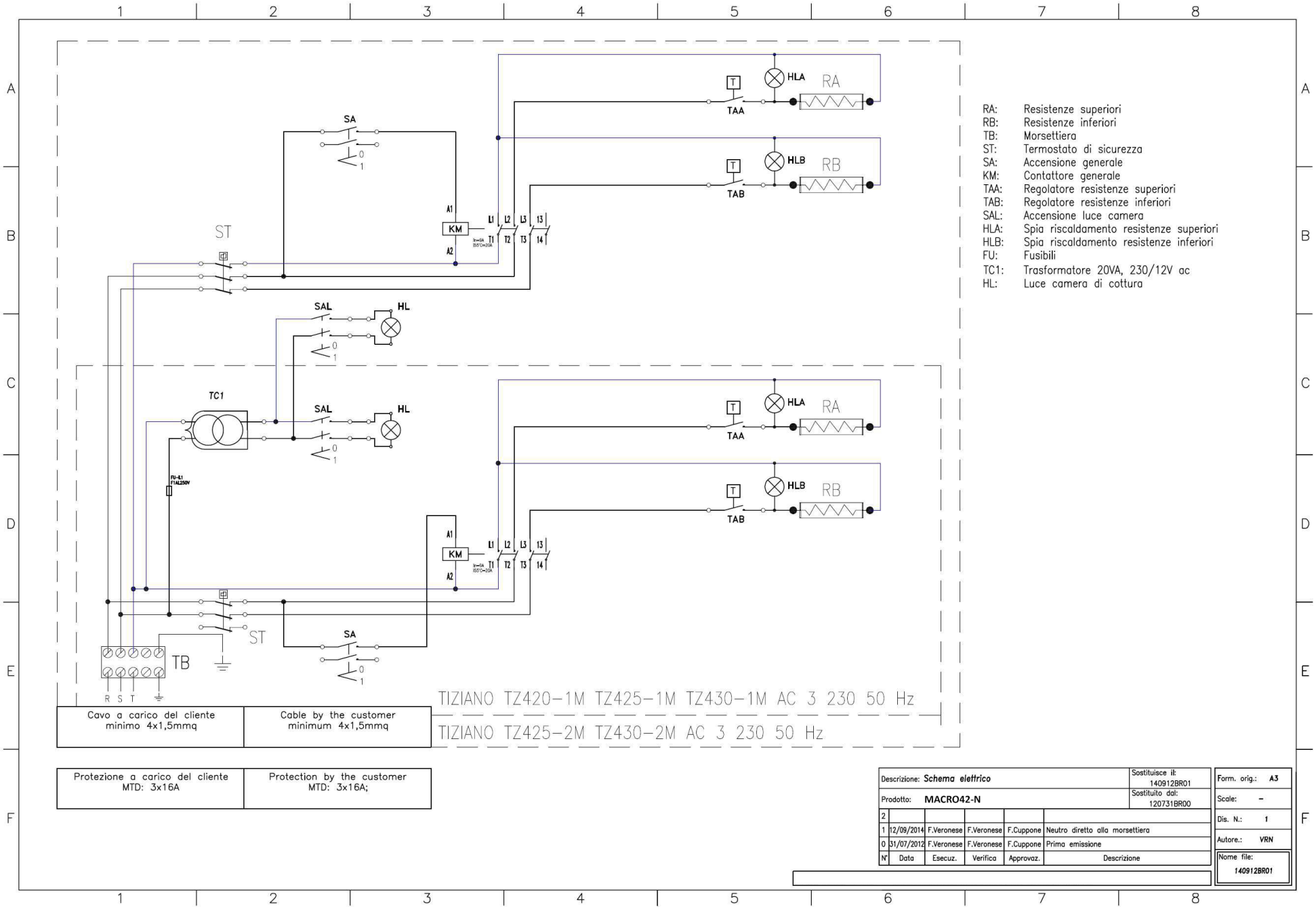

AC 230V 50/60 Hz

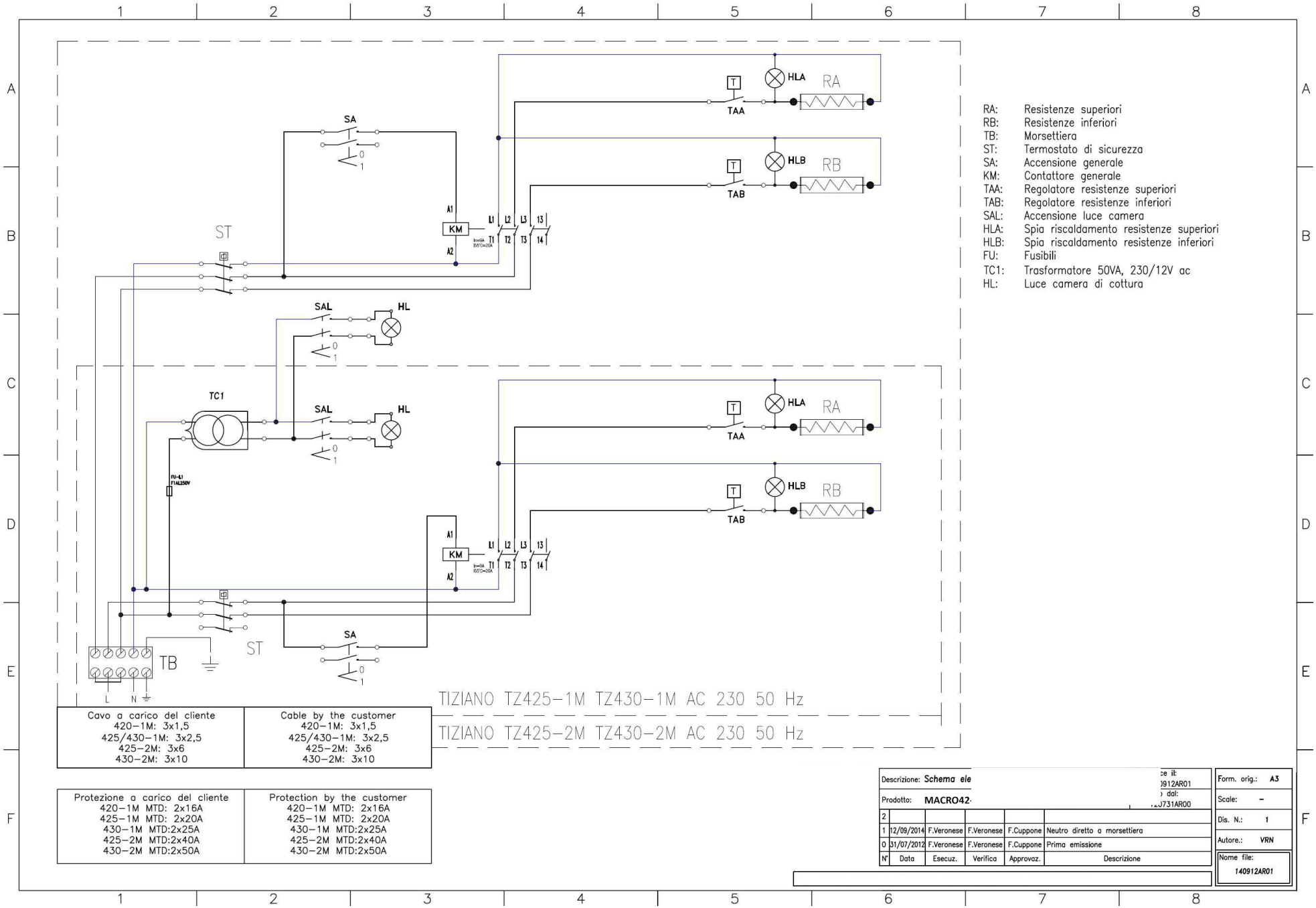
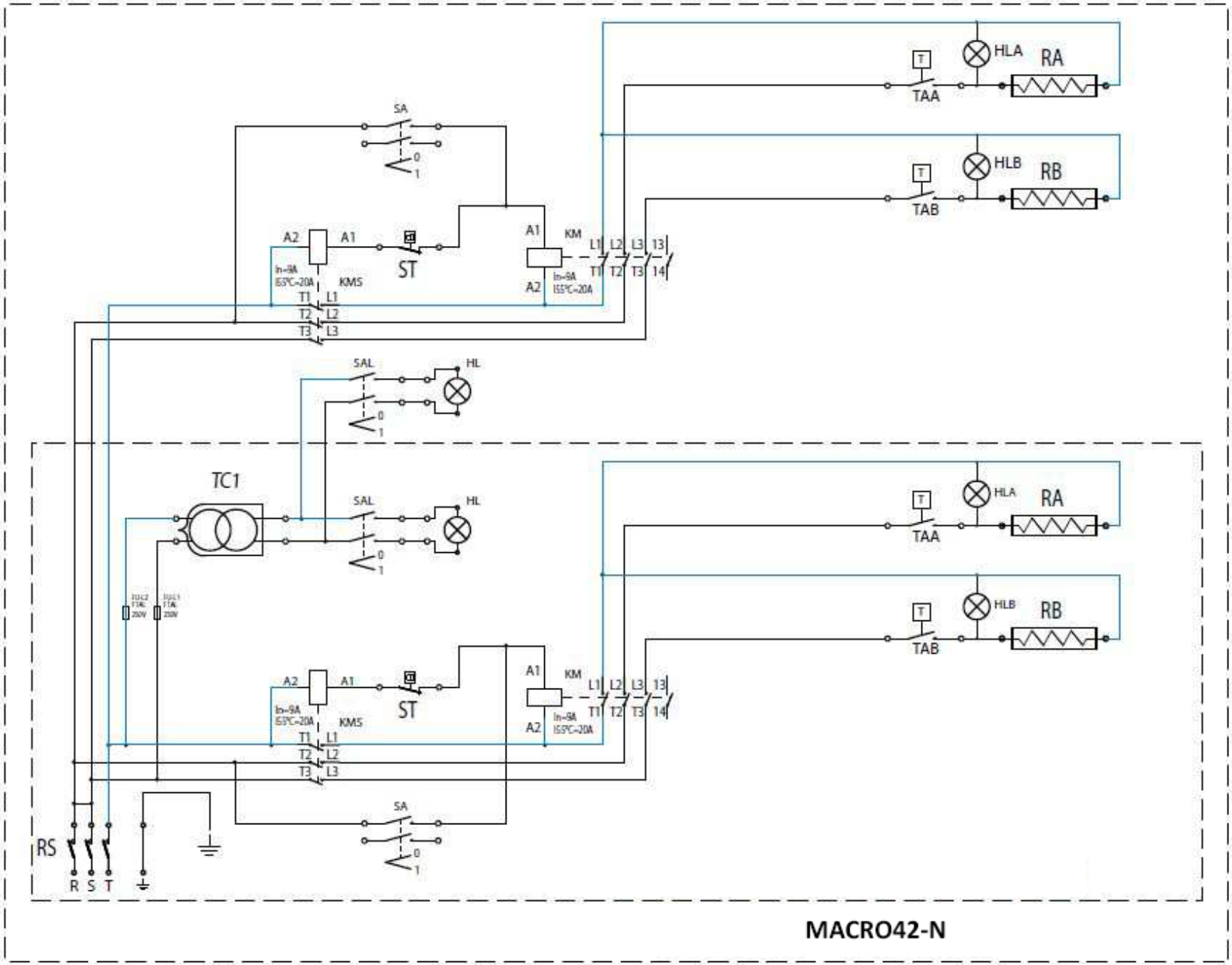
AC 208V 60 Hz - AC 3 208V 60 Hz