Diamond

MOD : BRIO43/X-A

Production code : P011001DIA

12/2023

Technical data	Models / Type		
	SN-CA-304-E	**SN-CA-304-ES**	**SN-UA-604-E**
B18		X	
B15			X
Power (kW)	3.2	3,6	3.2
Voltage (V)	220 / 240 1N		
Nominal Current (A)	14	15,6	14
Frequency (Hz)	50 / 60		

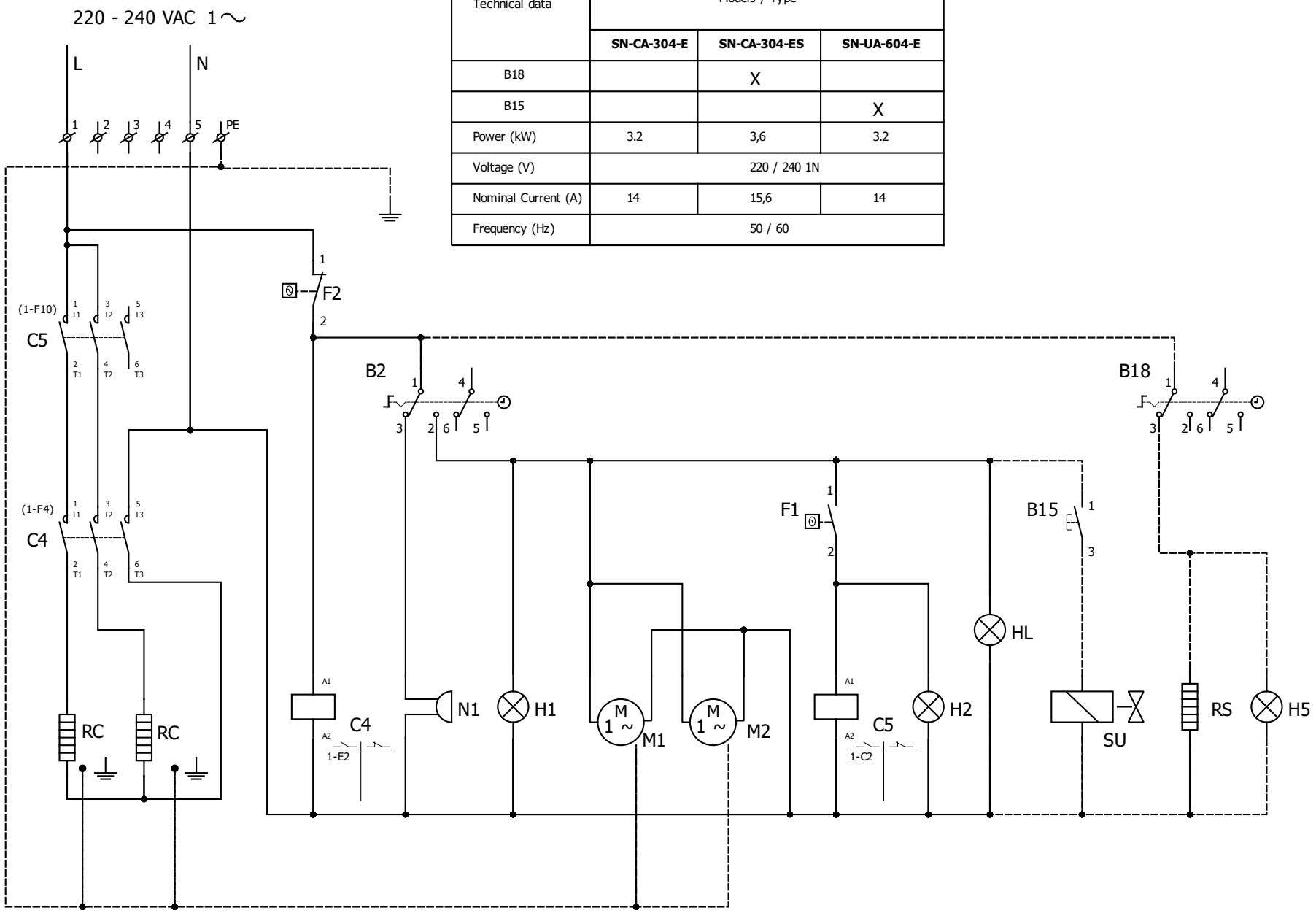

SIG	ENGLISH DESCRIPTION
B15	WATER INJECTION BUTTON COOKING CHAMBER
B18	SALAMANDER TIMER
B2	COOKING TIMER
C4	COOKING CHAMBER HEATER CONTACTOR
C5	COOKING CHAMBER HEATER CONTACTOR
F1	COOKING CHAMBER THERMOSTAT
F2	SAFETY CHAMBER THERMOSTAT
H1	OVEN PILOT LAMP ON
H2	HEATERS LAMP ON
H5	SALAMANDER COOKING TIMER PILOT LAMP
HL	COOKING CHAMBER LIGHT
M1	COOKING CHAMBER MOTOR 1
M2	COOKING CHAMBER MOTOR 2
mA	MAIN TERMINAL BOARD
N1	COOKING CYCLE END BUZZER
RC	CHAMBER HEATER ELEMENT
RS	SALAMANDER HEATER ELEMENT
SU	HUMIDIFICATION WATER SOLENOID VALVE

Autore : DP	SCHEMA FORNO 460 x 340 & 600 x 400	File : A050106
Data : 29/06/2023		Foglio : 1/1