Diamond

MOD : NFT402-R2

Production code : ACE 430 CS PO

03/2025

ELECTRIC CIRCUIT – NFT402-R2// NFT402-R2X

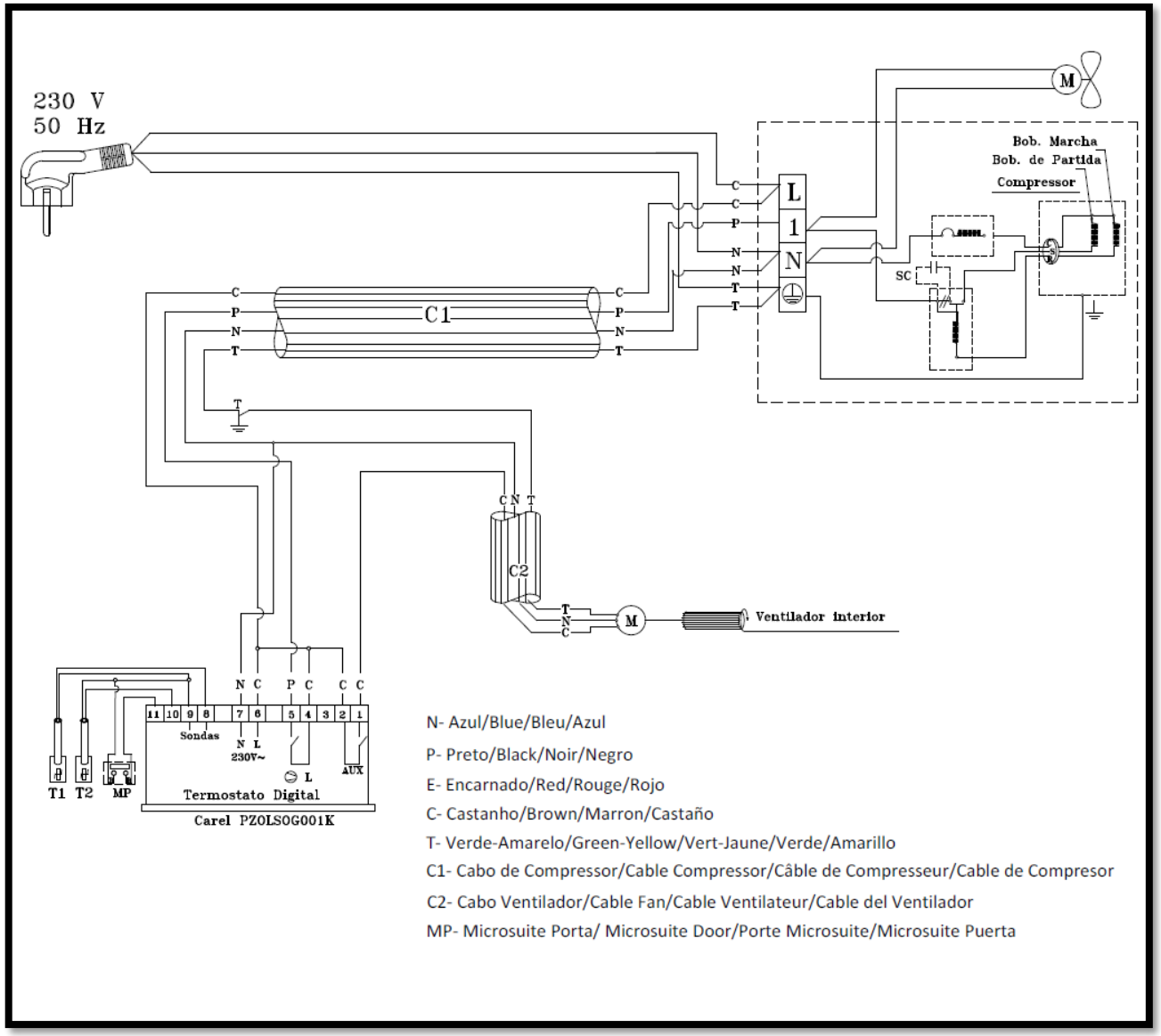

N- Azul/Blue/Bleu/Azul

P- Preto/Black/Noir/Negro

E- Encarnado/Red/Rouge/Rojo

C- Castanho/Brown/Marron/Castaño

T- Verde-Amarelo/Green-Yellow/Vert-Jaune/Verde/Amarillo

C1- Cabo de Compressor/Cable Compressor/Câble de Compresseur/Cable de Compresor

C2- Cabo Ventilador/Cable Fan/Cable Ventilateur/Cable del Ventilador

MP- Microsuite Porta/ Microsuite Door/Porte Microsuite/Microsuite Puerta