# MOD : WR-B64U-3C

**Production code : P011003DIV**

04/2025

| Technical data | Models / Type | | |
|---|---|---|---|
| | **SN-CA-304-E** | **SN-CA-304-ES** | **SN-UA-604-E** |
| B18 | | X | |
| B15 | | | X |
| Power (kW) | 3.2 | 3,6 | 3.2 |
| Voltage (V) | 220 / 240 1N | | |
| Nominal Current (A) | 14 | 15,6 | 14 |
| Frequency (Hz) | 50 / 60 | | |

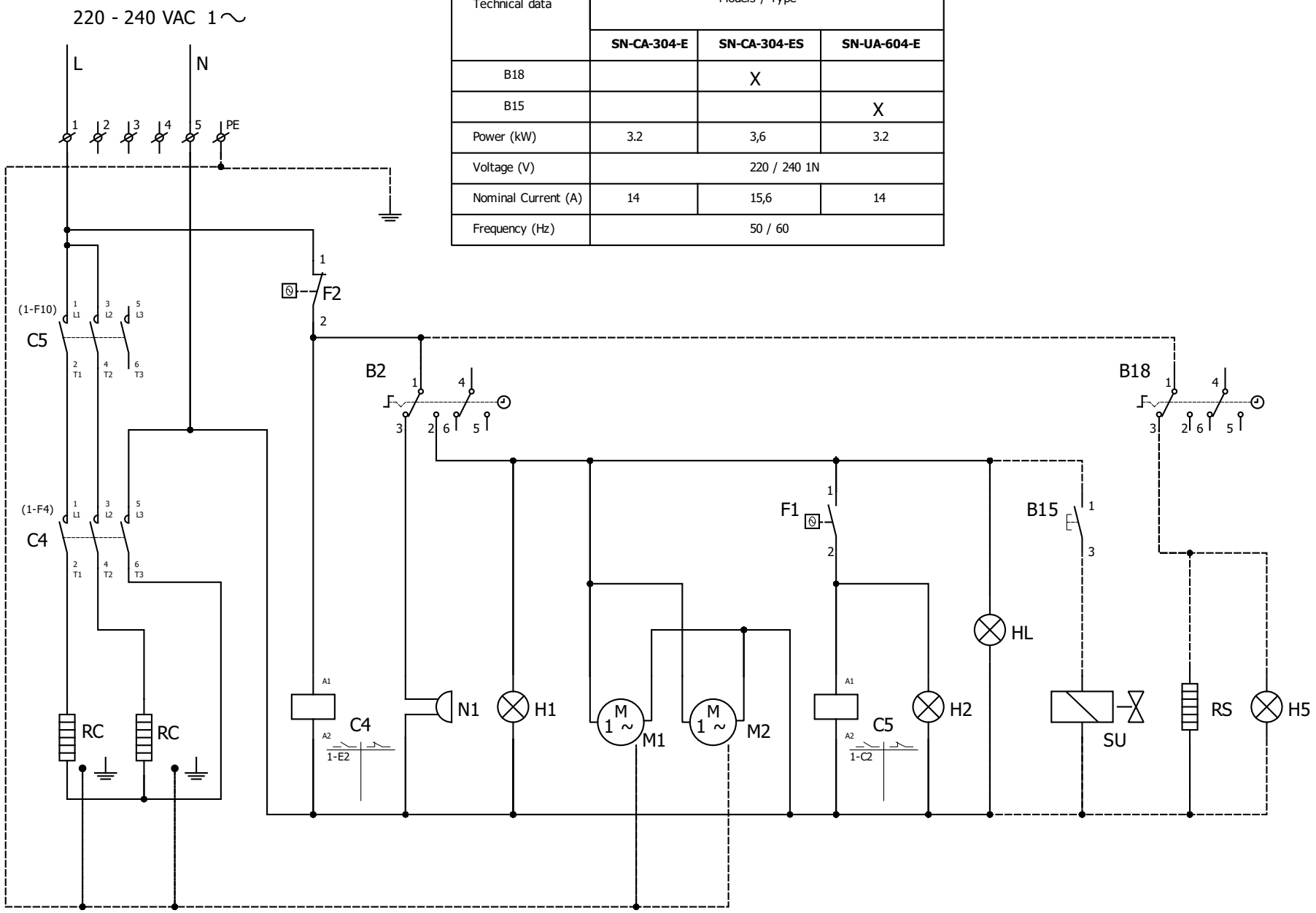


| SIG | ENGLISH DESCRIPTION |
|---|---|
| B15 | WATER INJECTION BUTTON COOKING CHAMBER |
| B18 | SALAMANDER TIMER |
| B2 | COOKING TIMER |
| C4 | COOKING CHAMBER HEATER CONTACTOR |
| C5 | COOKING CHAMBER HEATER CONTACTOR |
| F1 | COOKING CHAMBER THERMOSTAT |
| F2 | SAFETY CHAMBER THERMOSTAT |
| H1 | OVEN PILOT LAMP ON |
| H2 | HEATERS LAMP ON |
| H5 | SALAMANDER COOKING TIMER PILOT LAMP |
| HL | COOKING CHAMBER LIGHT |
| M1 | COOKING CHAMBER MOTOR 1 |
| M2 | COOKING CHAMBER MOTOR 2 |
| mA | MAIN TERMINAL BOARD |
| N1 | COOKING CYCLE END BUZZER |
| RC | CHAMBER HEATER ELEMENT |
| RS | SALAMANDER HEATER ELEMENT |
| SU | HUMIDIFICATION WATER SOLENOID VALVE |
| | |

| | | |
|---|---|---|
| Autore : DP | SCHEMA FORNO 460 x 340 & 600 x 400 | File : A050106 |
| Data : 29/06/2023 | | Foglio : 1/1 |