Diamond

MOD : CCV5-MP

Production code : 30000033887

06/2025

ALL RIGHTS RESERVED. REPRODUCTION OR DISCLOSURE TO THIRD PARTIES IS ANY FORMAT IS STRICTLY PROHIBITED WITHOUT WRITTEN AUTHORITY FROM THE PROPRIETORS.

BU RESİM ÜZERİNDEN ÖLÇÜ ALINAMAZ / DO NOT SCALE DRAWING

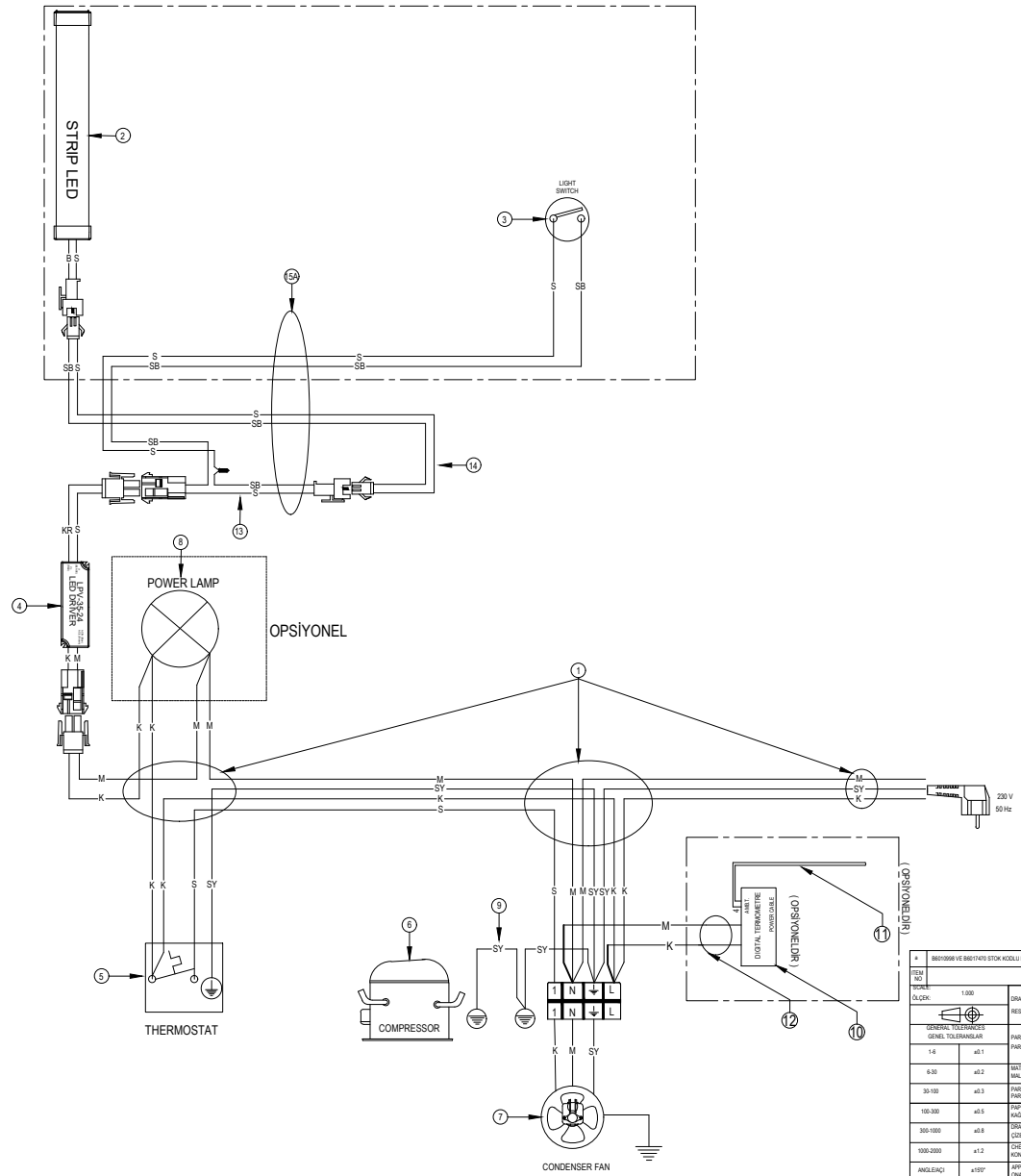

NO	KLIMASAN CODE		DESCRIPTION	PCS
	NETSIS KODU	SAP KODU	STOK TANIMI	KULLANIM MİKTARI (ADET)
1	B6011966	10000008221	KABLO_SETI_BESLEME_DONO_TESHIR_STRIP_LEDLI	1
2	C6021899	10000011857	LED_STRIP_T3_I_HIGH_DENSITY_5240_2835_12MBLM_6500K_6500K_24VDC_11.52W_L1000mm	1
	C6023132	10000012540	LED_STRIP_T3_I_HIGH_DENSITY_5040_2835_12MBLM_6000K-6400K_24VDC_11.52W_L1500_ACSJ_SOL_IP44_BANTLI	1
3	C6021884	10000011501	SWITCH_ROCKER_YUVARLAK_KILIFLI_10A_IP55(TS6500	1
4	H6015126 H6015127 H6015128	20000009457 20000009458 20000007128	TRANS LED_24VDC_35W_MLWN6600LL_LPV_35_24_SCHNEIDER LED DRIVER 24VDC 35W 1.5A 220-240V 50/60Hz IP67 (TERMAL) LED DRIVER 24VDC 35W 1.5A 220-240V 50/60Hz IP67 (TERMAL KORUMALI)	1
5	A6004537	10000013226	TERMOSTAT_MEKANIK_EXPROOF_UCJU2U2_12/30MM_(-20/-36)	1
6	A6001424	10000005582	KOMPRESOR_EMBRACO_NEK 2134 U_220-240V_50Hz_R290a_8kJoH	1
	A6001467	10000005596	KOMPRESOR_EMBRACO_NEK2150U_220-240V_50Hz_R290	
7	A6002341	10000013421	FAN_AKSIYEL_KONDENSER_AYAKSIZ_220-240V_7/31W_WEBGUIANG_TERMAL_KORUMALI	1
8	C6023090	10000008616	SINYAL_LAMBASI_GUC_YUVARLAK_YESIL_DFSG_ANEL	1
9	Z6020085	10000010797	KABLO SCH3 KOMPRESOR TOPRAK 300mm	1
10	L120104020	10000011467	DIJITAL_TERMOMETRE_ERMAS_TB81_V1.1_KIRMIZI	1
11	A6006363	10000010822	ERMAS_NTC_SENSOR_ACIK_GRI_MAKARONSUZ_1500MM_VN	1
12	B6015498	10000011070	KABLO_BESLEME_DIJITAL_TERMOMETRE_R600	1
13	B6017470	10000008602	KABLO_SETI_STRIP_LED_SWITCH_ARA_TESHIR	1
14	B6015998	10000007843	KABLO_SETI_IC_AYDINLATMA_SONETLI_ICM_LEDLI_1500MM	1
15A	B6011967	10000008222	KABLO_SETI_STRIP_LED_SWITCH_ARA_DONO_TESHIR	1

TERMINALLERE C6021125 KODLU KILIF TAKILMALIDIR

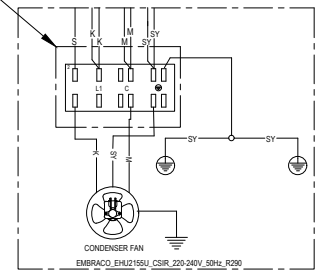

#					
ITEM NO	B6010599 VE B6017470 STOK KODLU KABLOLAR ALTERNATİF OLARAK GİRİLMİŞTİR.	2020-0998	17.02.2020	CUMHUR MEYDAN	SENCER BAŞARIR	ÖNER AKTAŞ
	N O T E S A Ç I K L A M A L A R	CHANGE NO DEG.NO	CHANGE DATE DEG.TARİHİ	CHANGED BY DEG. YAPAN	CHECKED BY KONTROL EDEN	APPROVED BY ONAYLAYAN

SCALE: ÖLÇEK: 1:000	DRAWING NO: RESİM NO:	017041	FIRST MADE FOR İLK TASARLANAN MODEL		Diamond
GENERAL TOLERANCES GENEL TOLERANSLAR	PART NAME: PARÇA ADI:	CCV5-MP			
1-6 ±0.1					ISSUE DATE/ YAYIN TARİHİ: 4.3.2016
6-30 ±0.2	MATERIAL: MALZEME:	.....			
30-100 ±0.3	PART CODE: PARÇA KODU:				
100-300 ±0.5	PAPER SIZE KAĞIT EBADI: A3	NAME/ADI-SOYADI	SIGNATURE/İMZA	DATE/TARİH	SHEET / SAYFA / TOTAL / TAMAMI
300-1000 ±0.8	DRAWN BY ÇİZEN	EMRAH KELEŞ		4.3.2016	
1000-2000 ±1.2	CHECKED BY KONTROL EDEN	SENCER BAŞARIR			MODEL/NAME: .....
ANGLE/AÇI ±15'0"	APPROVED BY ONAYLAYAN	ÖNER AKTAŞ			DIRECTORY: \\Klimasan\ortak\ARGE\TEKNIK\RESIMLER\GIE\ELEKTRIK