MOD : WR-C1714-6P-R2

Production code : CFDD0001B+IPAM401B R290

04/2025

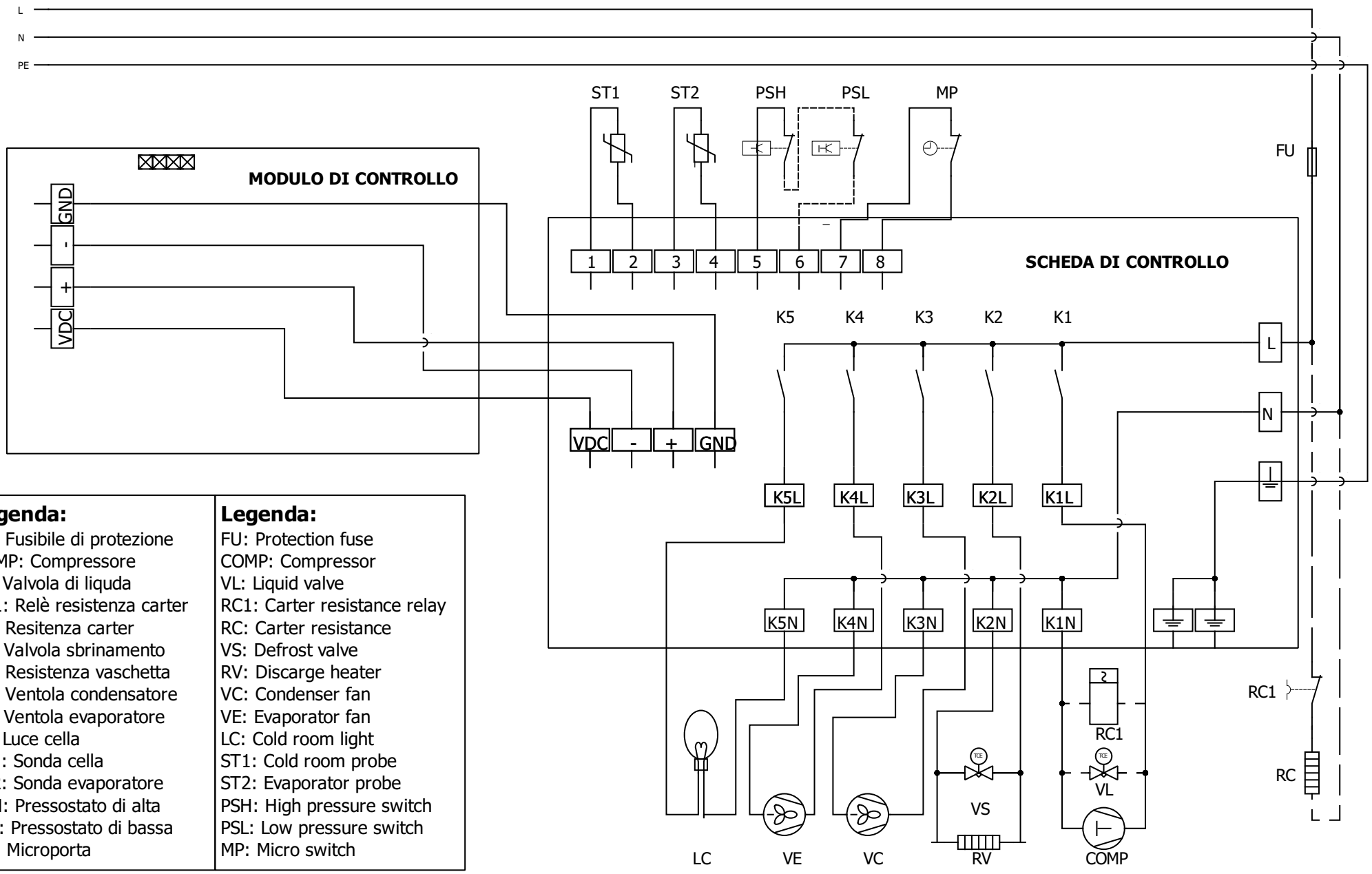

Legenda:	Legenda:
FU: Fusibile di protezione	FU: Protection fuse
COMP: Compressore	COMP: Compressor
VL: Valvola di liquda	VL: Liquid valve
RC1: Relè resistenza carter	RC1: Carter resistance relay
RC: Resitenza carter	RC: Carter resistance
VS: Valvola sbrinamento	VS: Defrost valve
RV: Resistenza vaschetta	RV: Discarge heater
VC: Ventola condensatore	VC: Condenser fan
VE: Ventola evaporatore	VE: Evaporator fan
LC: Luce cella	LC: Cold room light
ST1: Sonda cella	ST1: Cold room probe
ST2: Sonda evaporatore	ST2: Evaporator probe
PSH: Pressostato di alta	PSH: High pressure switch
PSL: Pressostato di bassa	PSL: Low pressure switch
MP: Microporta	MP: Micro switch